رئيس مهندسين
عبدالعزيز شعبان محمود

مهندس أقدم
نور وليد أحمد

Drawing Index

Sheet No.	Title	Sheet No.	Title	Sheet No.	Title	Sheet No.	Title
A	Architecture Drawings.	A17	Handicap Ramp& Corridor Railing.	SA07	Firefighting Detail	E02	Electric-Lighting.
A01	Site Plan	A18	WC Aluminum Window Details.	SA08	Firefighting Tank Detail	E03	Electric-Power.
A02	Location& Boundaries.	A19	PVC Door Details.	SA09	Disabled Toilet.	E04	Electric-Earthling System.
A03	Architecture Plan.	A20	Sliding Window& Door 3D.	SA10	Was Basin &WC Connections Details.	E05	Electric-Projectors &Exit.
A04	Front & Rear Elevation.	S	Structure Drawings.	SA11	Counter Wash Basin Detail.	E06	Electric-Fans &Public Address.
A05	Side Elevations.	S01	Roof Parapet, Attic & Tie Beams .	V	Views Drawings.	E07	Electric-Fire Alarm.
A06	Sections.	S02	Grids, Beams, Slab &Column.	V01	External View – Left Front	E08	Electric-Cameras.
A07	Window locations In Plans.	S03	Slab & Beam Reinforcements.	V02	External View – Left Rear	E09	Electric-Air-Conditioning Unit Distribution.
A08	Finishes Chart.	S04	Reinforcement Details.	V03	External View – Right Front	E10	Electric-Boards Layouts.
A09	Door &Windows No. &Dimensions.	S05	Lintel Details &Water Pump Cage.	V04	External View – Right Rear	E11	Electric-Board Connection.
A10	DORMA Door Detail.	SA	Sanitary Drawings.	V05	Internal View (Patient Toilet).	E12	Electric- Boards Layouts.
A11	Sliding Window (1m width)& Jacuzzi partition details.	SA01	Arch &Sanitary Details.	V06	Internal View (Reception).	E13	Electric-Air-Condoning Fan in Roof Details.
A12	Wall Section & Sliding Window (2m width).	SA02	Septic Tank& Cesspool.	V07	Internal View (Elevator).	E14	Electric-Air-Condoning Fan on Wall Details.
A13	C.N.C Door & Water Tank Detail.	SA03	Water Tanks & Roof Drainage.	V08	Internal View (Main Corridor).		
A14	Wooden, Steel Door & Walkway Handrail Details.	SA04	Water Supply Net.	V09	Internal View (Therapy Hall).		
A15	Medical Door Details.	SA05	Sewage Net.	E	Electric Drawings.		
A16	Water Heater Shade Details.	SA06	Firefighting Layout	E01	Electric-Cable Tray.		

مكتب باور
المهندس
رهان الدين محمد امين
BAWER OFFICE

دائرة صحة محافظة نينوى
قسم المشاريع وخدمات الهندسة والصيانة

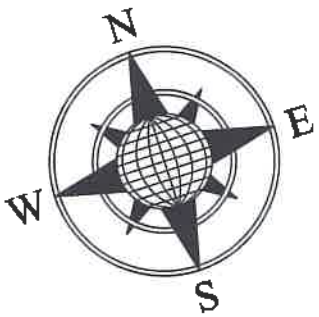

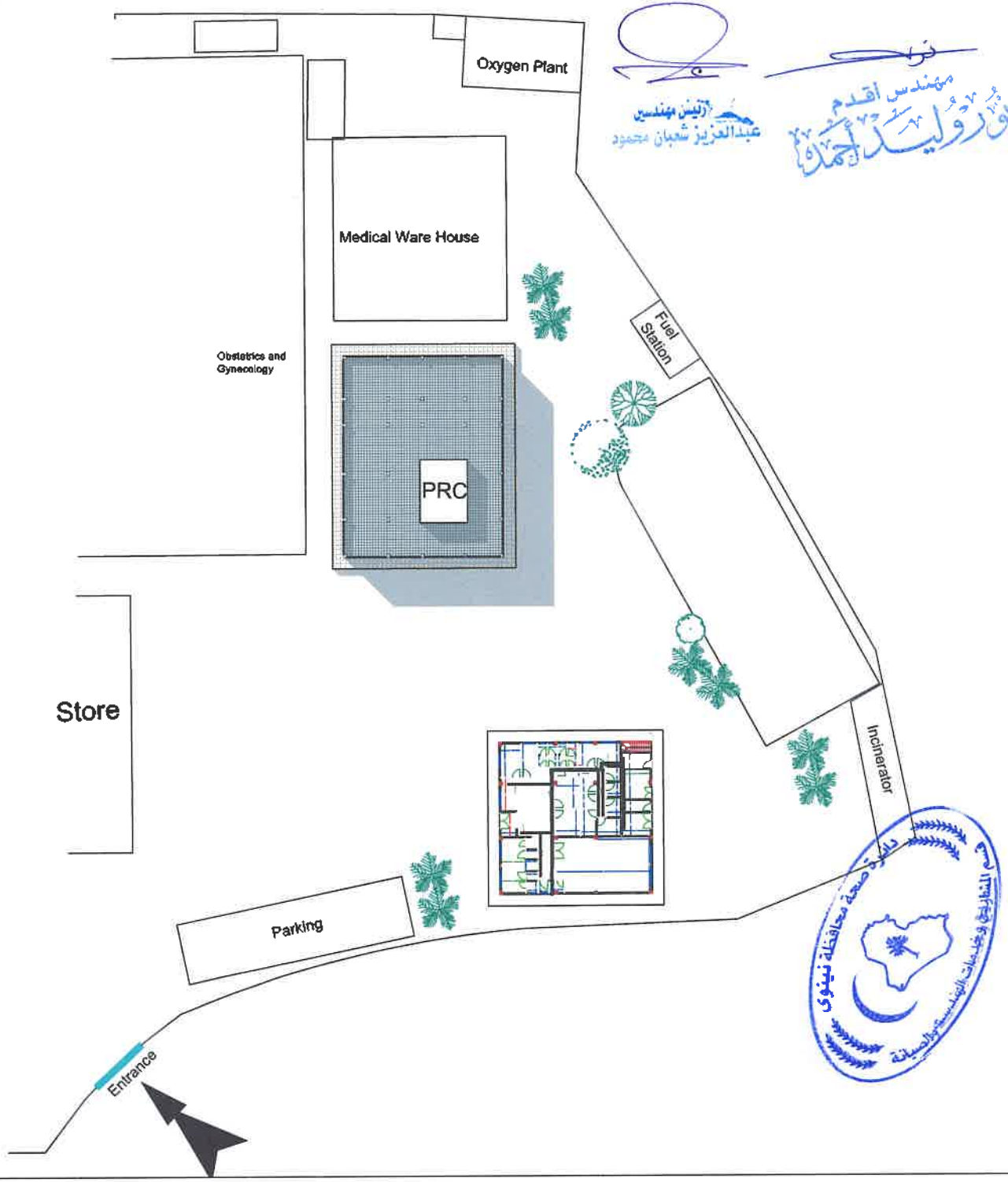

رئيس مهندسين
عبدالعزيز شعبان محمود

مهندس اقدم
وليد أحمد

General Notes

german cooperation
DEUTSCHE ZUSAMMENARBEIT

Malteser International

DAMA

All dimensions in(m)

THIS DRAWINGS IS THE COPYRIGHT OF DAMA,MI&BMZ/ IRAQ . IT IS NOT ALLOWED TO COPY OR REPRODUCE ITS CONTENTS IN ANY FORM WITHOUT THEIR APPROVAL

CERTAIN DRAWINGS ARE NTS (NOT TO SCALED). TECHNICAL NOTES & SPECIFICATION SHALL BE REFERENCED

مكتب باور
المهندس
زهان الدين محمد امين
BAWER OFFICE

No.	Revision/Issue	Date

Firm Name and Address

Site Plan

Project Name and Address

Physical Rehabilitation Center-Telafer Hospital

Project
Date
Date

Scale
A01

دائرة صحة محافظة نينوى
قسم المشاريع وخدمات الهندسة والصيانة

Medical Ware house

Obstetrics and Gynecology

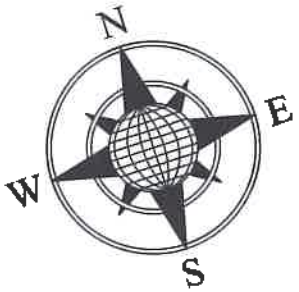

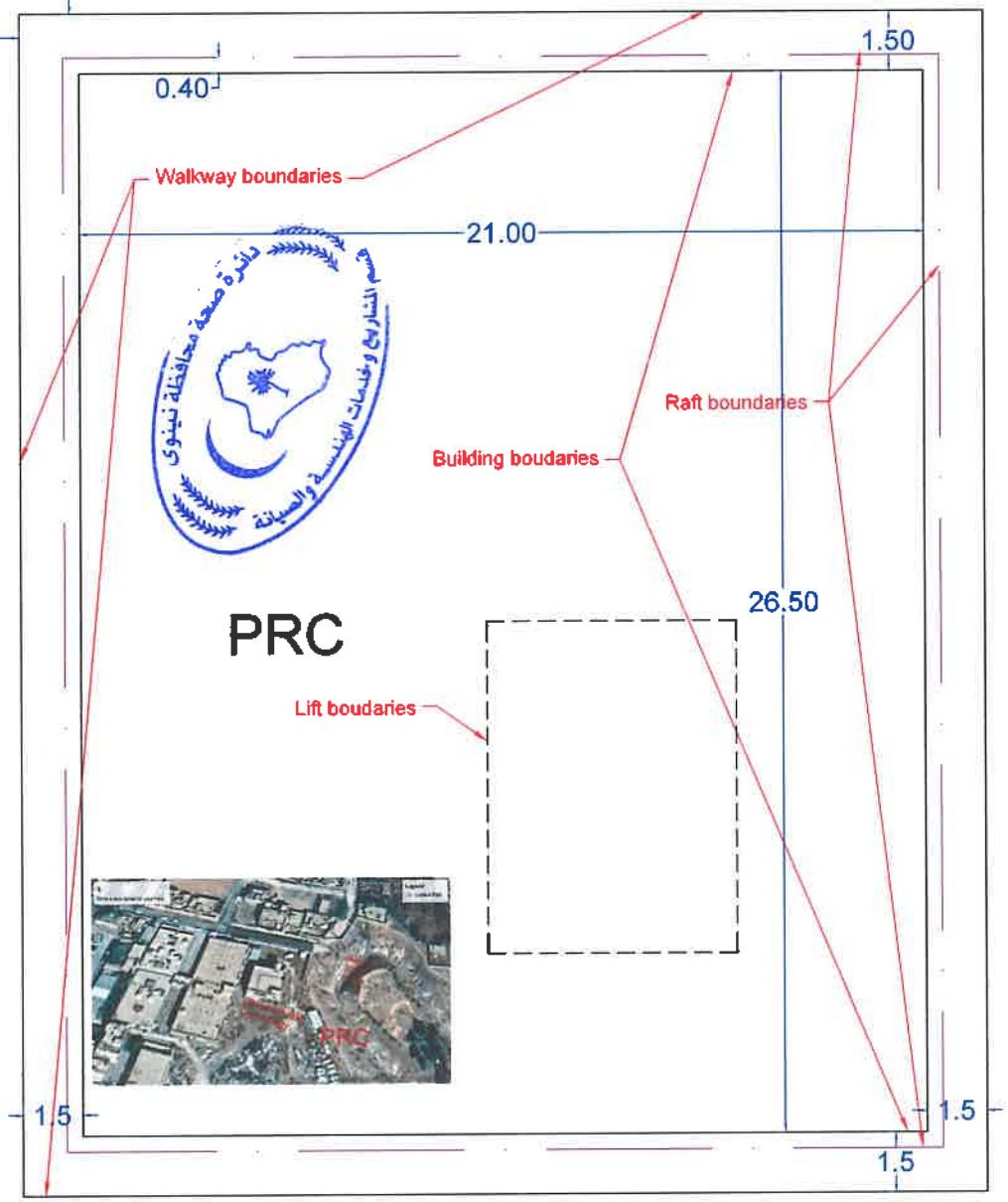

General Notes

german cooperation
DEUTSCHE ZUSAMMENARBEIT

Malteser International

DAMA

All dimensions in(m)

THIS DRAWINGS IS THE COPYRIGHT OF DAMA,MI&BMZ/ IRAQ . IT IS NOT ALLOWED TO COPY OR REPRODUCE ITS CONTENTS IN ANY FORM WITHOUT THEIR APPROVAL

CERTAIN DRAWINGS ARE NTS (NOT TO SCALED). TECHNICAL NOTES & SPECIFICATION SHALL BE REFERENCED

مكتب باور
المهندس
رهان الدين محمد امين
BAWER OFFICE

No.	Revision/Issue	Date

Title

Boundaries

Project Name and Address

Physical Rehabilitation Center-Telafer Hospital

Project
Date
Scale

Sheet
A02

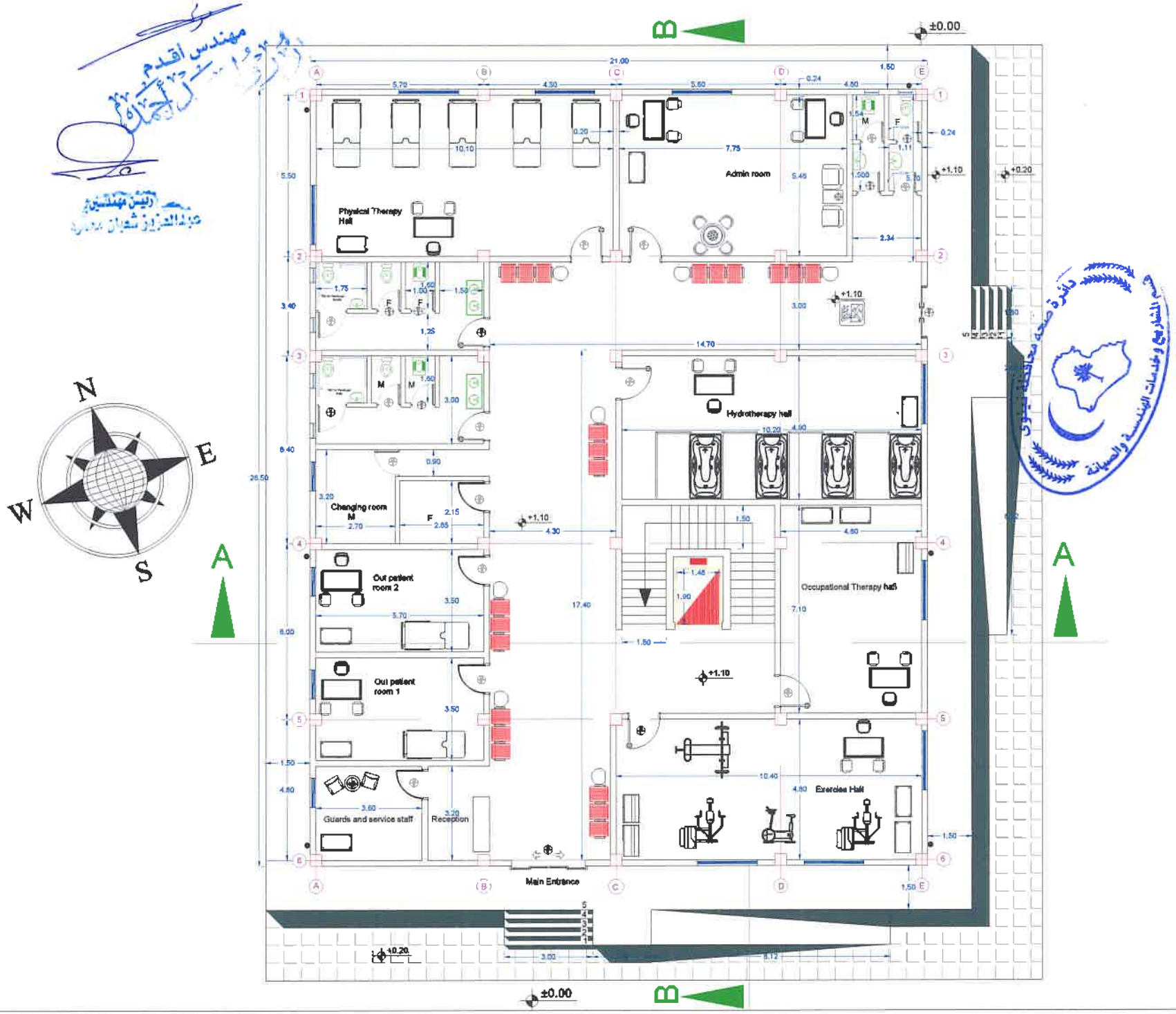

General Notes

german cooperation
DEUTSCHE ZUSAMMENARBEIT

Malteser International

DAMA

All dimensions in(m)

THIS DRAWINGS IS THE COPYRIGHT OF DAMA,MI&BMZ/ IRAQ . IT IS NOT ALLOWED TO COPY OR REPRODUCE ITS CONTENTS IN ANY FORM WITHOUT THEIR APPROVAL

CERTAIN DRAWINGS ARE NTS (NOT TO SCALED). TECHNICAL NOTES & SPECIFICATION SHALL BE REFERENCED

مكتب باور
المهندس
برهان الدين محمد امين
BAWER OFFICE

No.	Revision/Issue	Date

Firm Name and Address

Arch Plan

Project Name and Address

Physical Rehabilitation Center-Telafer Hospital

Project
Date
Scale
Sheet
A03

Rear Elevation

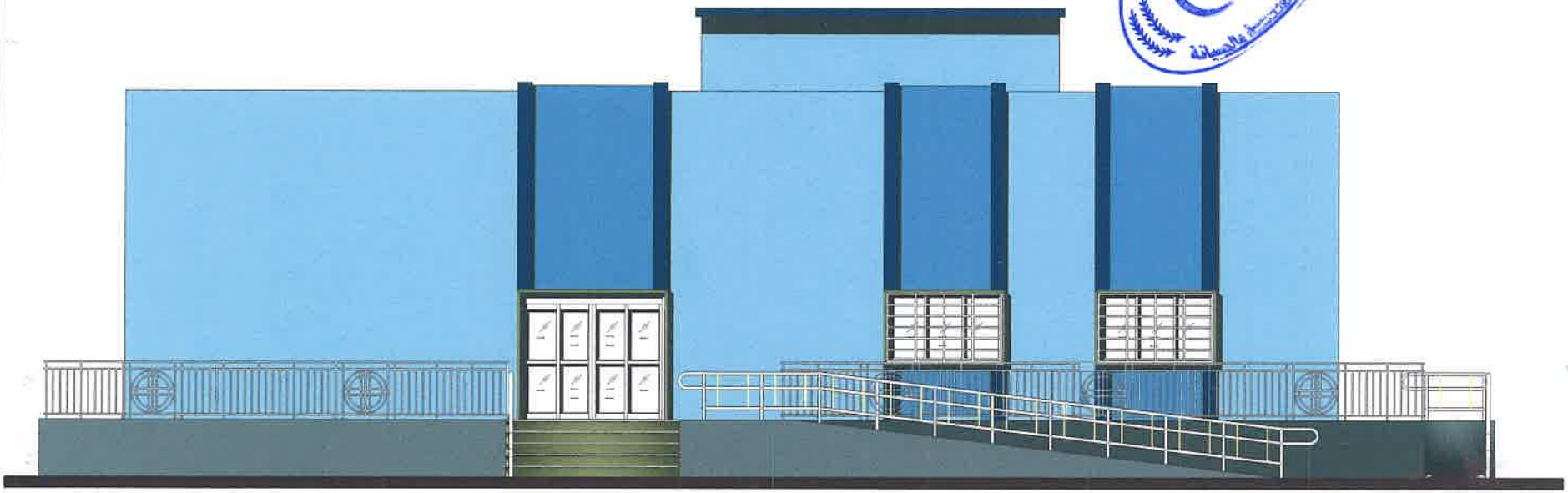

Front Elevation

General Notes

german cooperation
DEUTSCHE ZUSAMMENARBEIT

Malteser International

DAMA

All dimensions in(m)

THIS DRAWINGS IS THE COPYRIGHT OF DAMA,MI&BMZ/ IRAQ . IT IS NOT ALLOWED TO COPY OR REPRODUCE ITS CONTENTS IN ANY FORM WITHOUT THEIR APPROVAL

CERTAIN DRAWINGS ARE NTS (NOT TO SCALED). TECHNICAL NOTES & SPECIFICATION SHALL BE REFERENCED

مكتب باور
المهندس
زهان الدين محمد امين
BAWER OFFICE

No.	Revision/Issue	Date

Plan Name and Address

Front& Rear Elevations

Project Name and Address

Physical Rehabilitation Center-Telafer Hospital

Project	Sheet
Date	A04
Scale	

Front Elevation

Right Side Elevation

Left Side Elevation

General Notes

german cooperation
DEUTSCHE ZUSAMMENARBEIT

Malteser International

DAMA

All dimensions in(m)

THIS DRAWINGS IS THE COPYRIGHT OF DAMA,MI&BMZ/ IRAQ . IT IS NOT ALLOWED TO COPY OR REPRODUCE ITS CONTENTS IN ANY FORM WITHOUT THEIR APPROVAL

CERTAIN DRAWINGS ARE NTS (NOT TO SCALED). TECHNICAL NOTES & SPECIFICATION SHALL BE REFERENCED

مكتب باور
المهندس
زهان الدين محمد امين
BAWER OFFICE

No.	Revision/Issue	Date

Side Elevations

Physical Rehabilitation Center-Telafer Hospital

A05

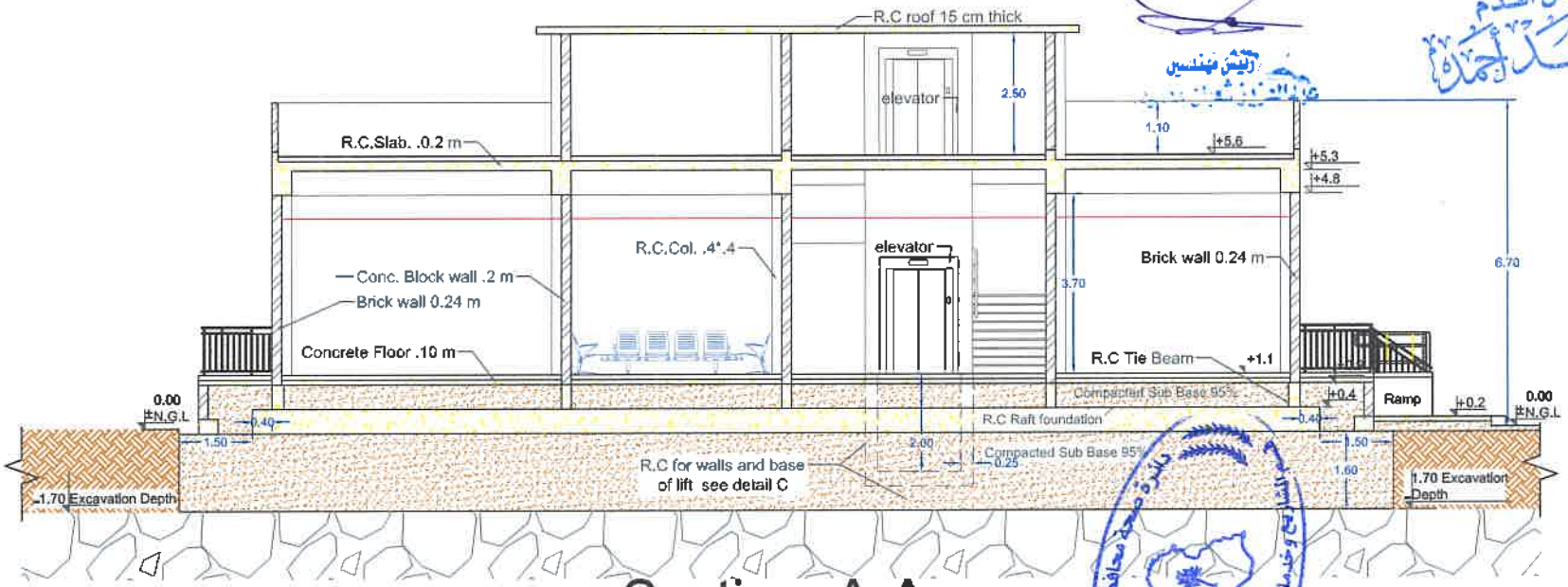

Section A-A

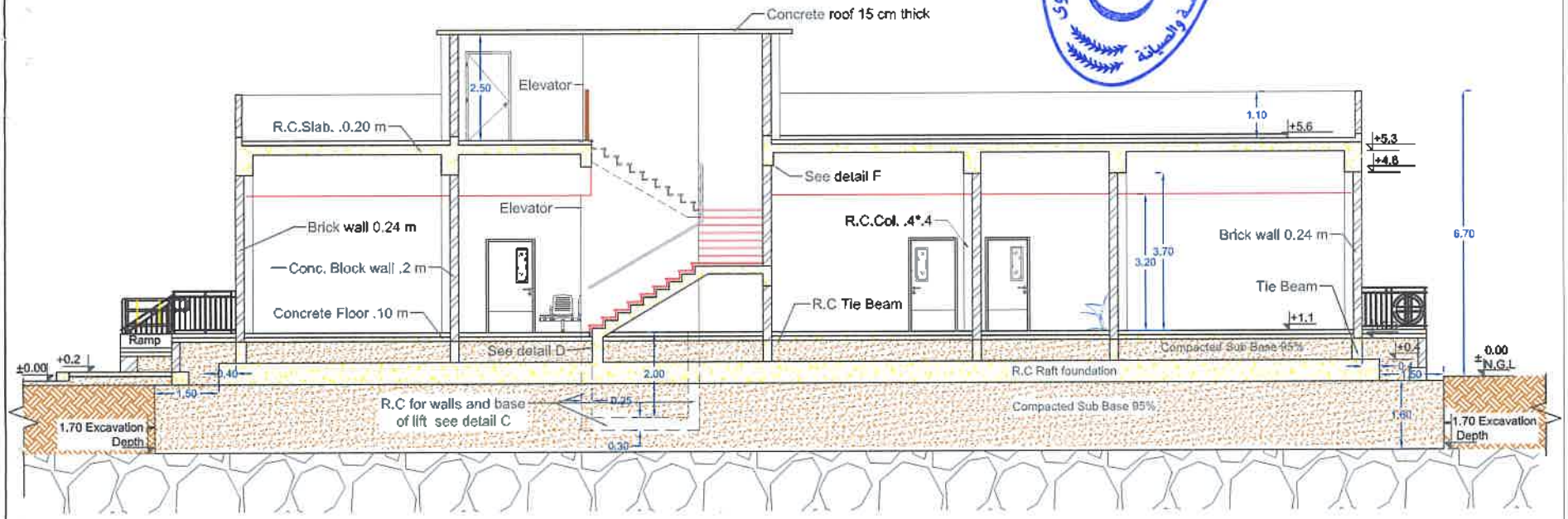

Section B-B

General Notes

german cooperation
DEUTSCHE ZUSAMMENARBEIT

Malteser International

DAMA

All dimensions in(m)

THIS DRAWINGS IS THE COPYRIGHT OF DAMA,MI&BMZ/ IRAQ . IT IS NOT ALLOWED TO COPY OR REPRODUCE ITS CONTENTS IN ANY FORM WITHOUT THEIR APPROVAL

CERTAIN DRAWINGS ARE NTS (NOT TO SCALED). TECHNICAL NOTES & SPECIFICATION SHALL BE REFERENCED

مكتب باور
المهندس
زهان الدين محمد امين
BAWER OFFICE

No.	Revision/Issue	Date

Firm Name and Address

Sections

Project name and Address

Physical Rehabilitation Center-Telafer Hospital

Project	Sheet
Date	A06
Date	

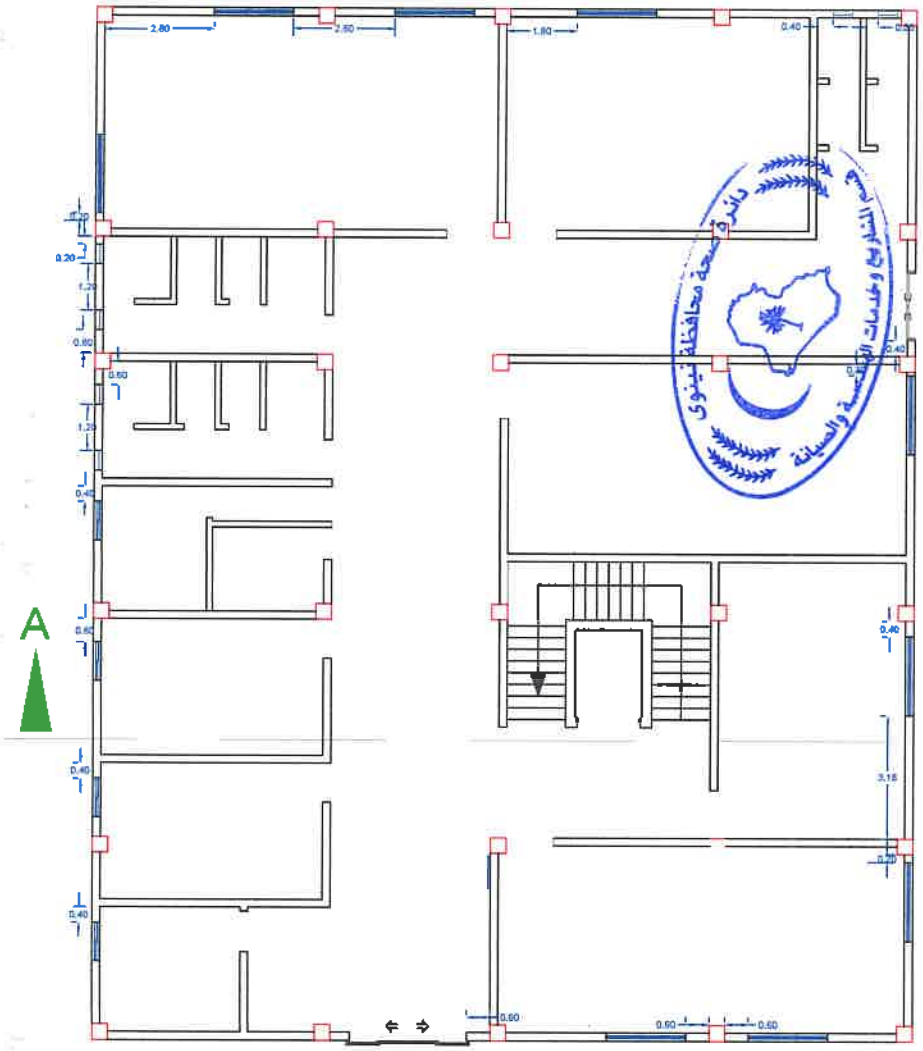

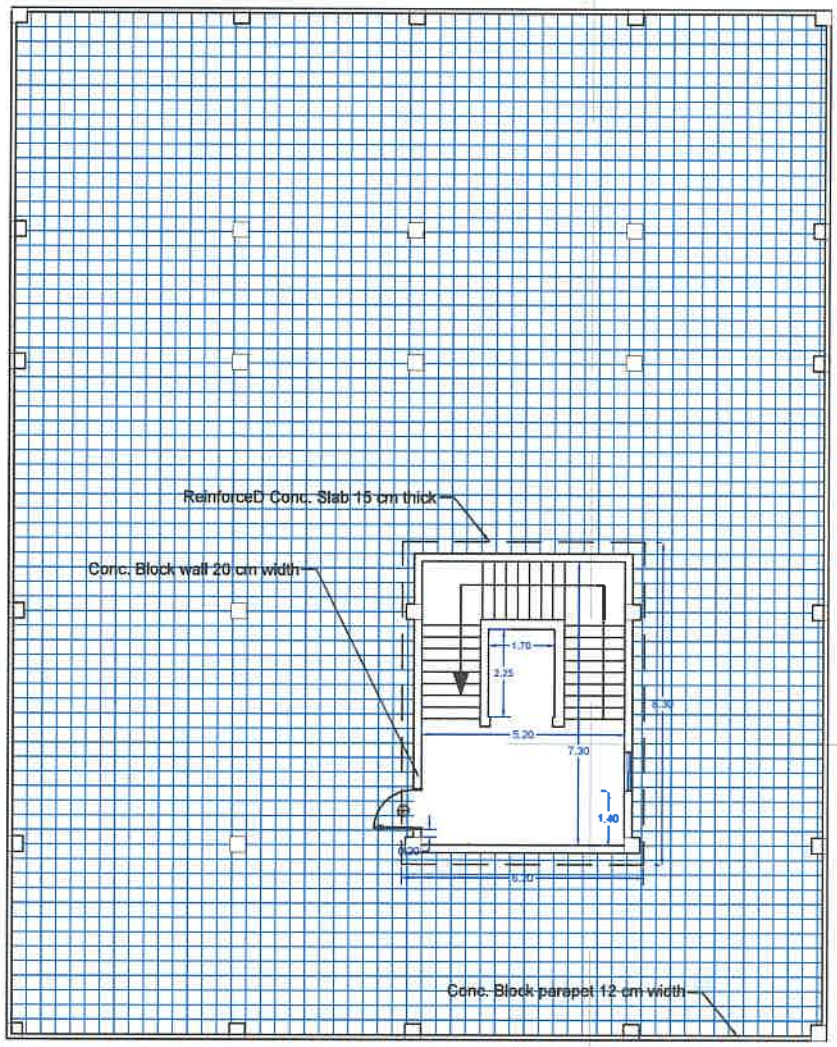

General Notes

german cooperation
DEUTSCHE ZUSAMMENARBEIT

Malteser International

DAMA

All dimensions in(m)

THIS DRAWINGS IS THE COPYRIGHT OF DAMA,MI&BMZ/ IRAQ . IT IS NOT ALLOWED TO COPY OR REPRODUCE ITS CONTENTS IN ANY FORM WITHOUT THEIR APPROVAL

CERTAIN DRAWINGS ARE NTS (NOT TO SCALED). TECHNICAL NOTES & SPECIFICATION SHALL BE REFERENCED

مكتب باور
المهندس
برهان الدين محمد امين
BAWER OFFICE

No.	Revision/Issue	Date

Title Name and Address

Windows Locations in Plan

Project Name and Address

Physical Rehabilitation Center-Telafer Hospital

Project

Scale

Date

Sheet

A07

Finishing chart for Internal walls,ceilings and floors

Room	No	Ceramic wall 1.2 m height	Ceramic wall 3.2 m height	Gypsum wall above ceramic	PlasticFalse ceiling	Acoustic False ceiling	Porcelain Flooring	Ceramic Flooring	Granite steps	Granite tile wall 3.2 cm height	Cement plastere wall 2.5 m height	Water proof emulsion paint above cement plastere wall	emulsion paint above gypsum plastere wall
Hydrotheraphy	1		●			●	●						
Physical theraphy	1	●		●		●	●						●
Admin room	1	●		●		●	●						●
Ghanging/M	1	●		●		●	●						●
Changing/F	1	●		●		●	●						●
Toilet/M	1		●		●			●					
Toilet/F	1		●		●			●					
Out patient	2	●		●		●	●						●
Guard&reception	1	●		●		●	●						●
Occupation Theraphy	1	●		●		●	●						●
Exercise Hall	1	●		●		●	●						●
Lift	1									●			
Main Corridor	1	●		●		●	●						●
Sub Corridor	1	●		●		●	●						●
Toilet/Staff	1		●		●			●					
Stair steps		●		●		●			●				●
Pent house						●	●				●	●	

General Notes

german cooperation
DEUTSCHE ZUSAMMENARBEIT

Malteser International

DAMA

All dimensions in(m)

THIS DRAWINGS IS THE COPYRIGHT OF DAMA,MI&BMZ/ IRAQ . IT IS NOT ALLOWED TO COPY OR REPRODUCE ITS CONTENTS IN ANY FORM WITHOUT THEIR APPROVAL

CERTAIN DRAWINGS ARE NTS (NOT TO SCALED). TECHNICAL NOTES & SPECIFICATION SHALL BE REFERENCED

مكتب باور
المهندس
برهان الدين محمد امين
BAWER OFFICE

No.	Revision/Issue	Date

Finishing Chart

Physical Rehabilitation Center-Telafer Hospital

A08

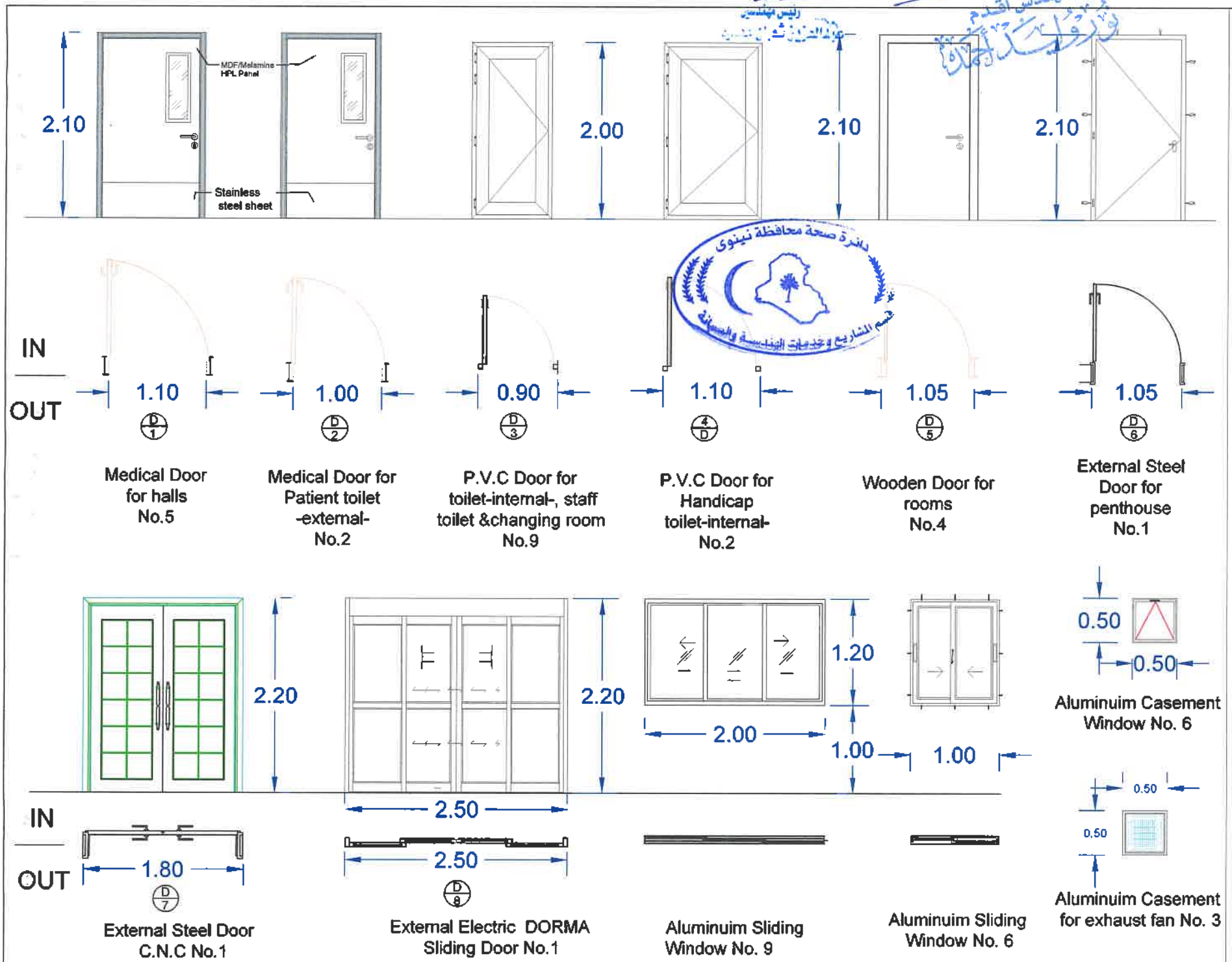

General Notes

german cooperation
DEUTSCHE ZUSAMMENARBEIT

Malteser International

DAMA

All dimensions in(m)

THIS DRAWINGS IS THE COPYRIGHT OF DAMA,MI&BMZ/ IRAQ . IT IS NOT ALLOWED TO COPY OR REPRODUCE ITS CONTENTS IN ANY FORM WITHOUT THEIR APPROVAL

CERTAIN DRAWINGS ARE NTS (NOT TO SCALED). TECHNICAL NOTES & SPECIFICATION SHALL BE REFERENCED

مكتب باور
المهندس
زهان الدين محمد امين
BAWER OFFICE

No.	Revision/Issues	Date

Firm Name and Address

Doors &Window

Project Name and Address

Physical Rehabilitation Center-Telafer Hospital

Project | Sheet
Date
Scale

A09

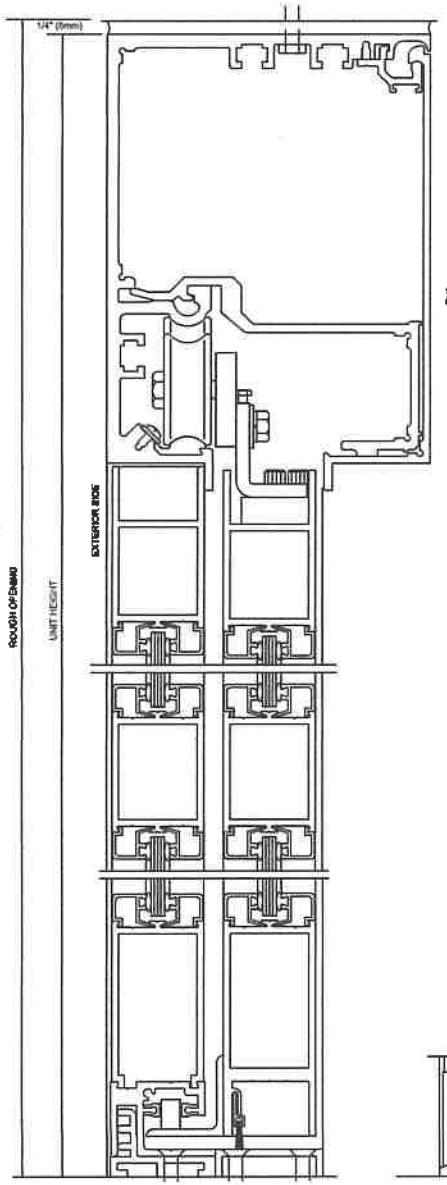

VERTICAL SECTION
FULL SCALE
DOOR SHOWN IN OPEN POSITION
1

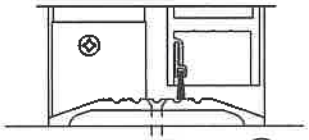

THRESHOLD SECTION
FULL SCALE
3

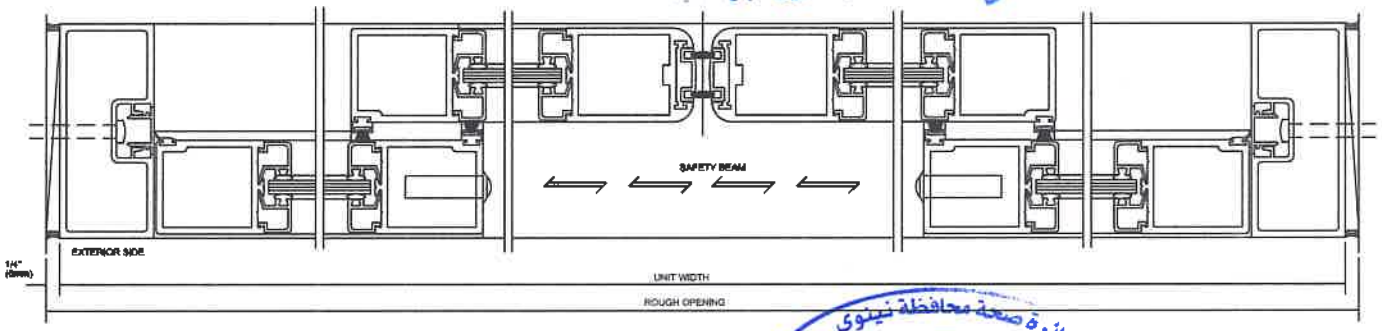

HORIZONTAL SECTION
FULL SCALE

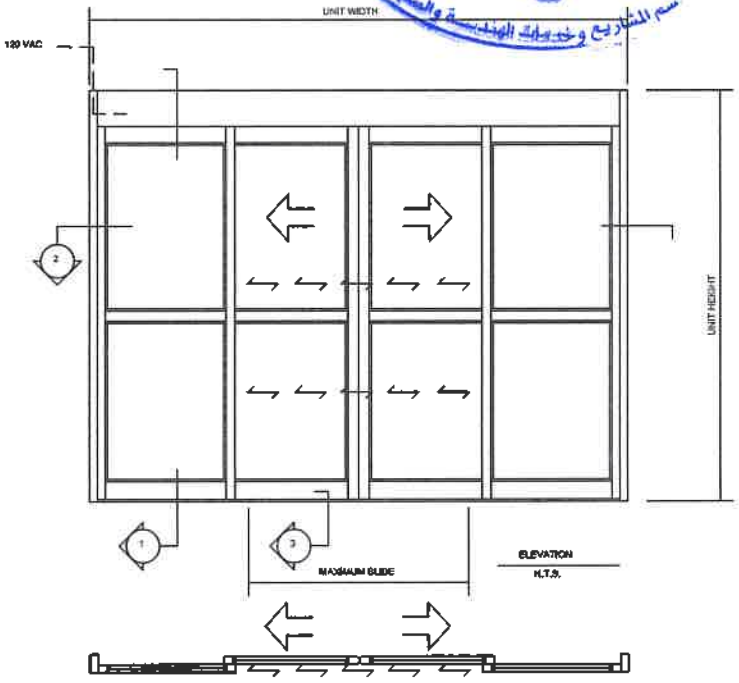

ELEVATION
N.T.S.

FLOOR PLAN
N.T.S.

مهندس أقدم
نور وليد أحمد

رئيس مهندسين

دائرة صحة محافظة نينوى
قسم المشاريع وخدمات الهندسة والصيانة

Convert Notes

german cooperation
DEUTSCHE ZUSAMMENARBEIT

Malteser International

DAMA

All dimensions in(m)

THIS DRAWINGS IS THE COPYRIGHT OF DAMA,MI&BMZ/ IRAQ . IT IS NOT ALLOWED TO COPY OR REPRODUCE ITS CONTENTS IN ANY FORM WITHOUT THEIR APPROVAL

CERTAIN DRAWINGS ARE NTS (NOT TO SCALED). TECHNICAL NOTES & SPECIFICATION SHALL BE REFERENCED

مكتب باور
المهندس
برهان الدين محمد امين
BAWER OFFICE

No.	Revision/Issue	Date

Firm Name and Address

Automatic Sliding door

Project Name and Address

Physical Rehabilitation Center-Telafer Hospital

Project	Sheet
Date	A10
Drawn	

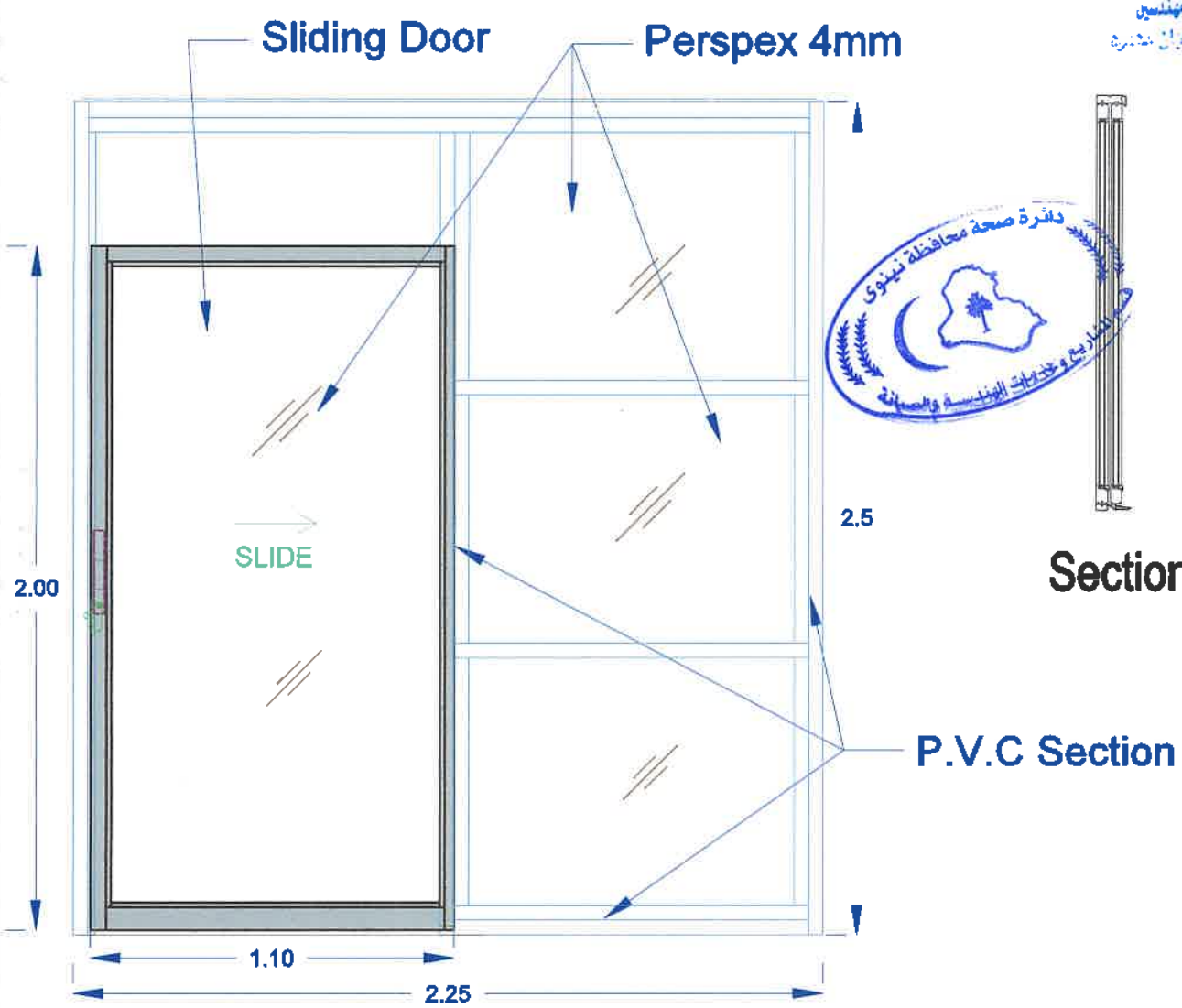

P.V.C Partition for Therapy Hall

Section

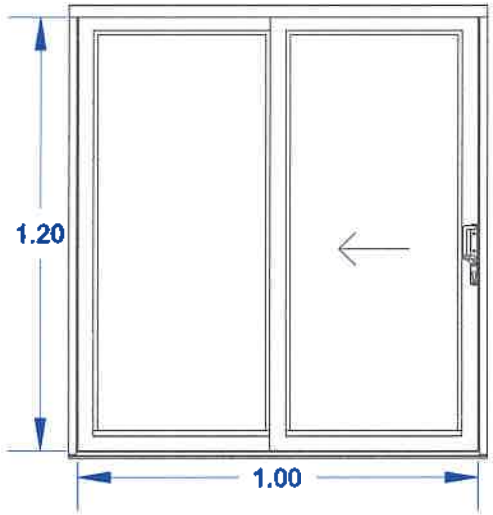

Elevation

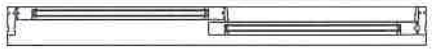

Plan

Aluminium Window

General Notes

german cooperation
DEUTSCHE ZUSAMMENARBEIT

Malteser International

DAMA

All dimensions in(m)

THIS DRAWINGS IS THE COPYRIGHT OF DAMA,MI&BMZ/ IRAQ . IT IS NOT ALLOWED TO COPY OR REPRODUCE ITS CONTENTS IN ANY FORM WITHOUT THEIR APPROVAL

CERTAIN DRAWINGS ARE NTS (NOT TO SCALED). TECHNICAL NOTES & SPECIFICATION SHALL BE REFERENCED

No.	Revision/Issue	Date

Sliding window &P.V.C Partition

Physical Rehabilitation Center-Telafer Hospital

A11

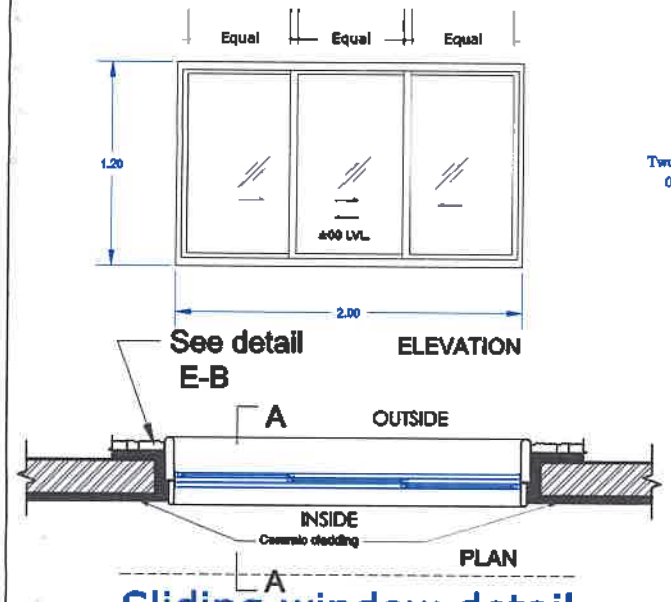

Sliding window detail

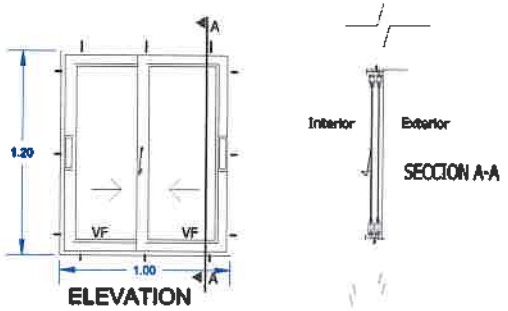

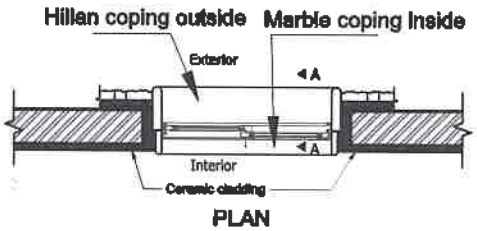

Sliding window detail

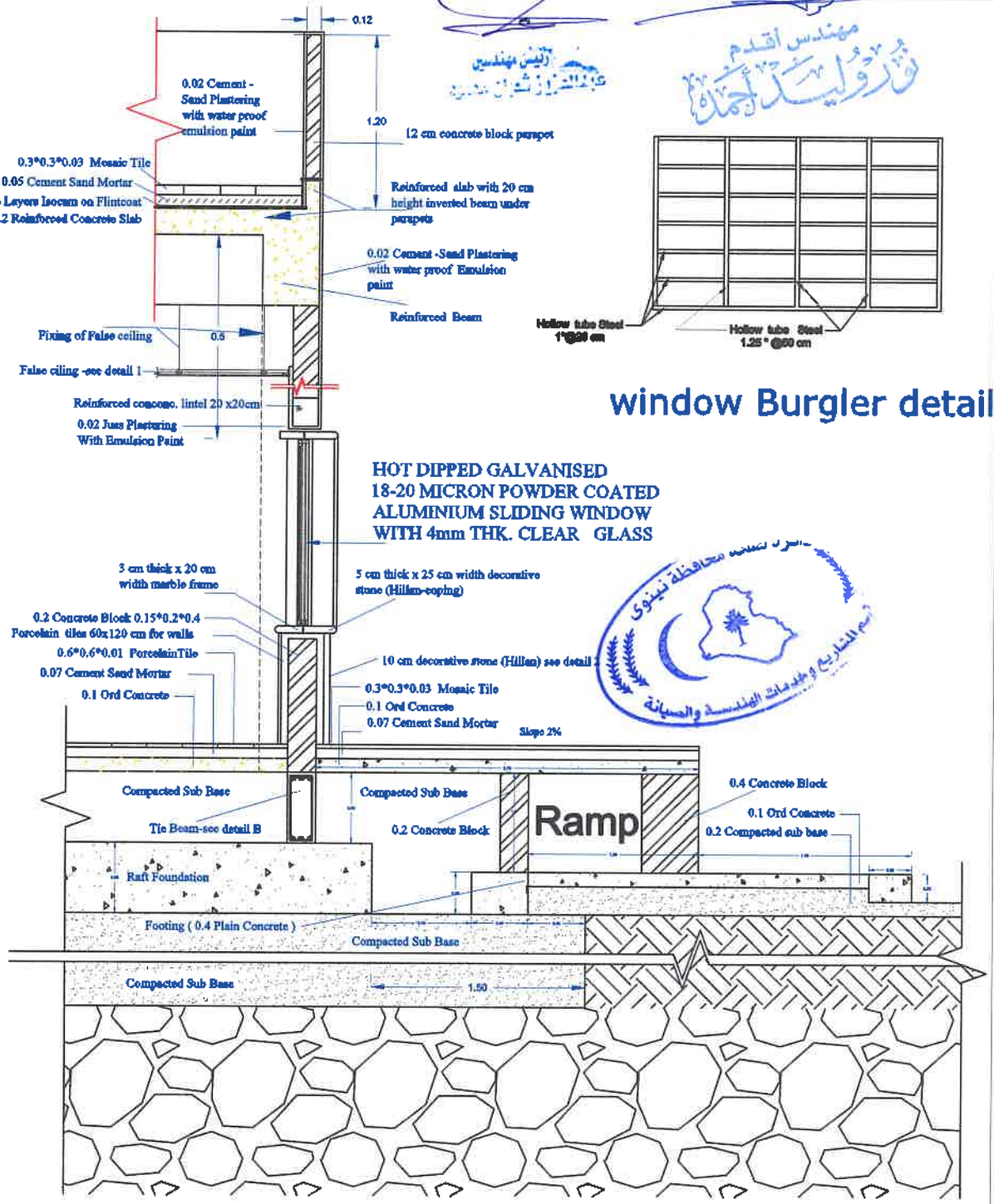

window Burgler detail

General Notes

german cooperation
DEUTSCHE ZUSAMMENARBEIT

Malteser International

DAMA

All dimensions in(m)

THIS DRAWINGS IS THE COPYRIGHT OF DAMA,MI&BMZ/ IRAQ . IT IS NOT ALLOWED TO COPY OR REPRODUCE ITS CONTENTS IN ANY FORM WITHOUT THEIR APPROVAL

CERTAIN DRAWINGS ARE NTS (NOT TO SCALED). TECHNICAL NOTES & SPECIFICATION SHALL BE REFERENCED

مكتب باور
المهندس
زهان الدين محمد امين
BAWER OFFICE

No.	Revision/Issue	Date

Firm Name and Address

Sliding windows &Wall section

Project Name and Address

Physical Rehabilitation Center-Telafer Hospital

Project
Title
Date
Sheet
A12

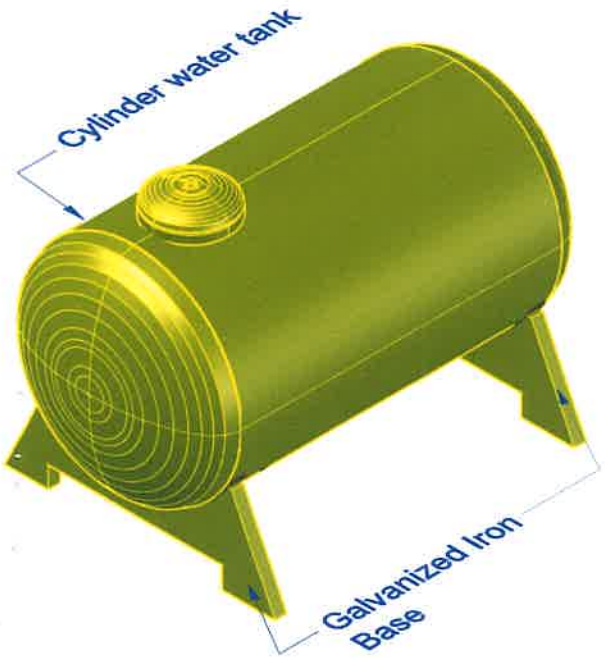

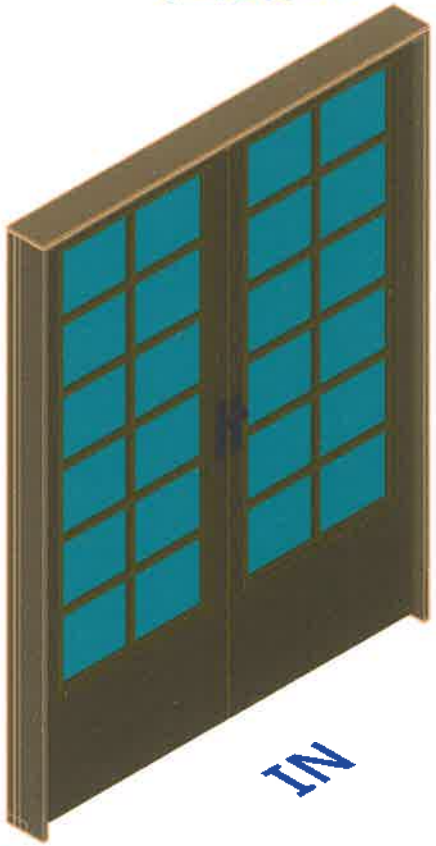

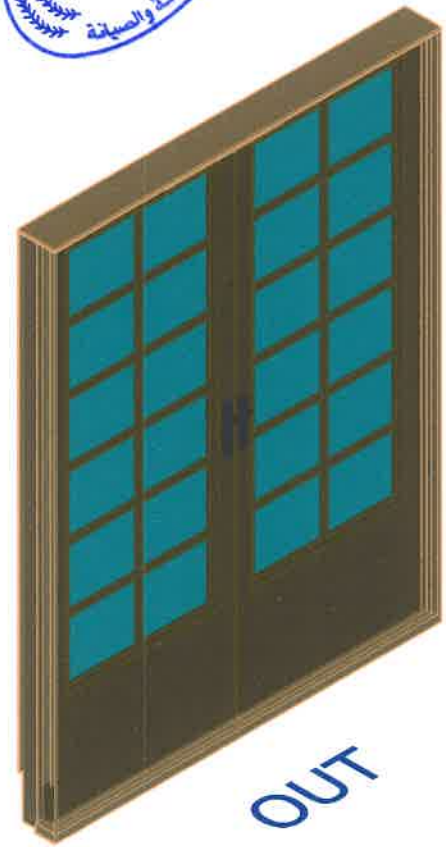

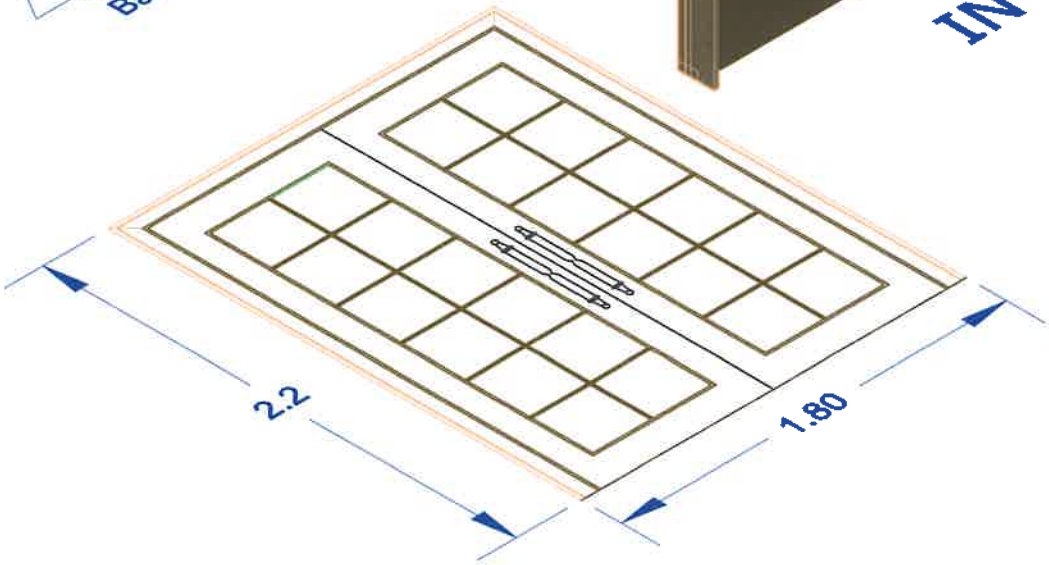

رئيس مهندسين

مهندس اقدم

دائرة صحة محافظة نينوى
قسم المشاريع وخدمات الهندسة والصيانة

German cooperation
DEUTSCHE ZUSAMMENARBEIT

Malteser International

DAMA

THIS DRAWINGS IS THE COPYRIGHT OF DAMA,MI&BMZ/ IRAQ . IT IS NOT ALLOWED TO COPY OR REPRODUCE ITS CONTENTS IN ANY FORM WITHOUT THEIR APPROVAL

CERTAIN DRAWINGS ARE NTS (NOT TO SCALED). TECHNICAL NOTES & SPECIFICATION SHALL BE REFERENCED

مكتب باور
المهندس
برهان الدين محمد امين
BAWER OFFICE

No.	Revision/Issue	Date

File Name and Address

External C.N.C Door&Water tank base

Project Name and Address

Physical Rehabilitation Center-Telafer Hospital

Project

Date

Scale

Sheet

A13

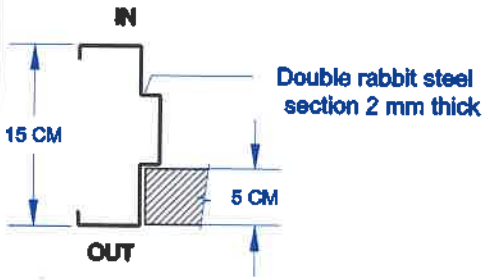

DETAIL F

Steel Door Details

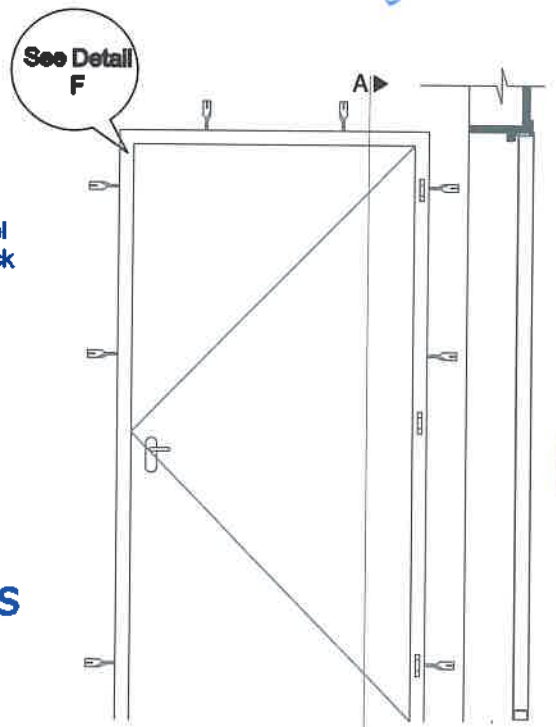

SECCION A-A

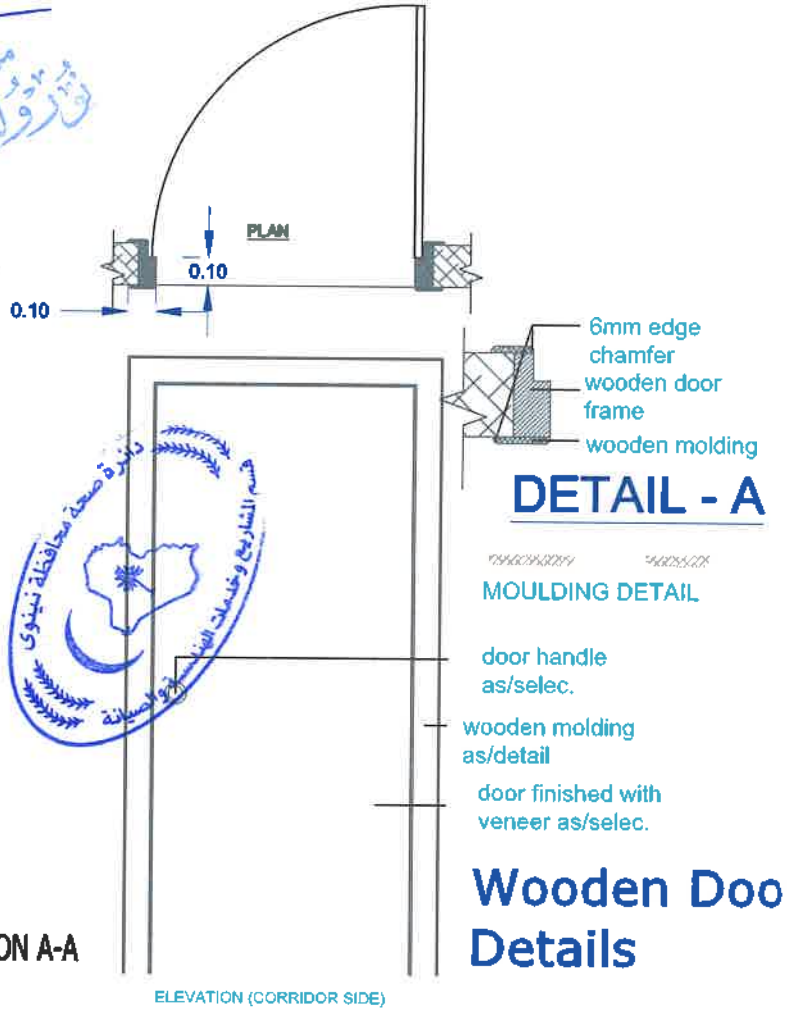

DETAIL - A

MOULDING DETAIL

Wooden Door Details

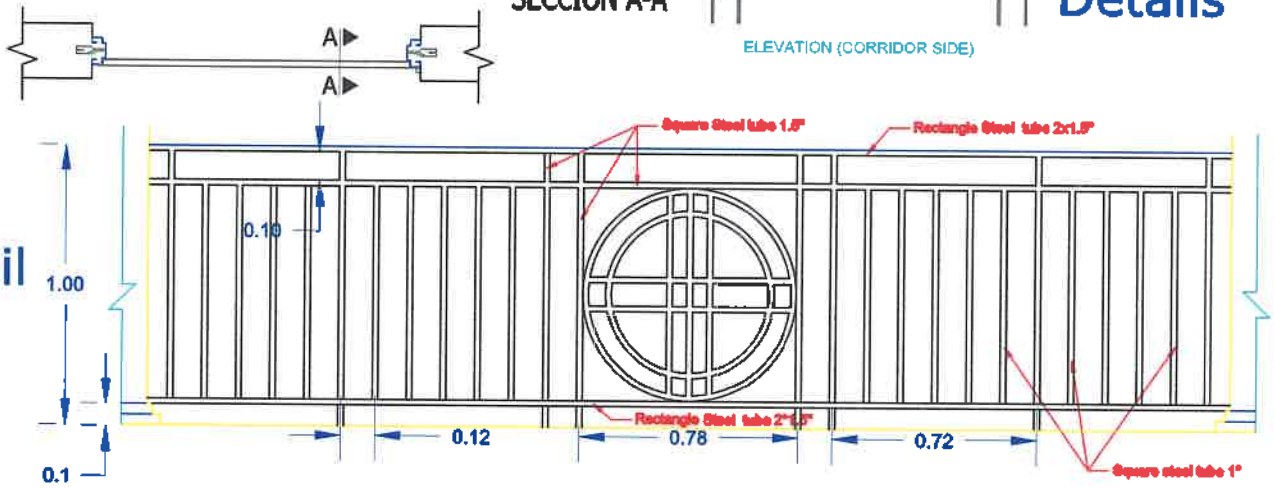

Steel Handrail detail

General Notes

german cooperation
DEUTSCHE ZUSAMMENARBEIT

Malteser International

DAMA

All dimensions in(m)

THIS DRAWINGS IS THE COPYRIGHT OF DAMA,MI&BMZ/ IRAQ . IT IS NOT ALLOWED TO COPY OR REPRODUCE ITS CONTENTS IN ANY FORM WITHOUT THEIR APPROVAL

CERTAIN DRAWINGS ARE NTS (NOT TO SCALED). TECHNICAL NOTES & SPECIFICATION SHALL BE REFERENCED

مكتب باور
المهندس
زهان الدين محمد امين
BAWER OFFICE

No.	Revision/Issue	Date

Wooden&steel door details +Handrail

Physical Rehabilitation Center-Telafer Hospital

A14

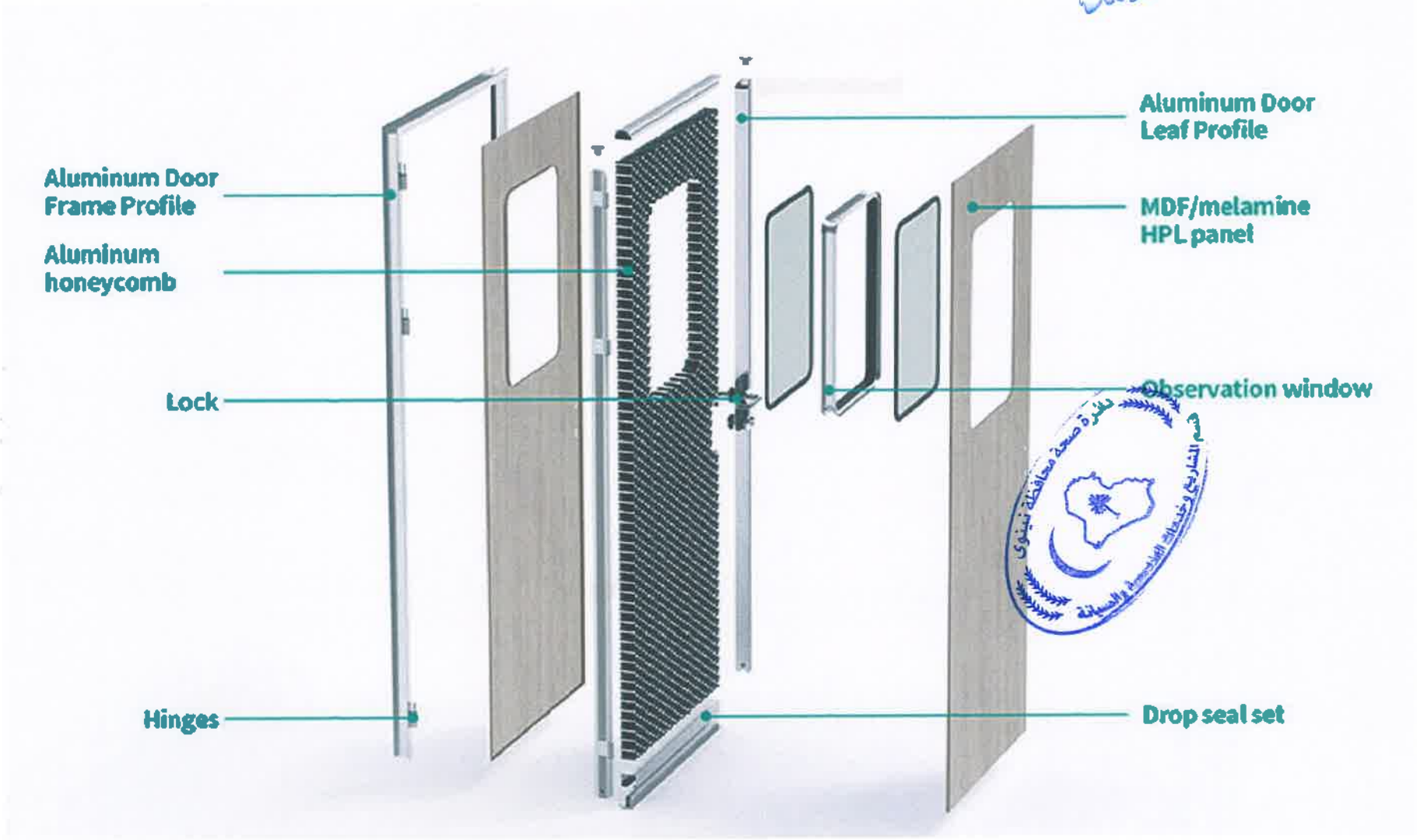

General Notes

german cooperation
DEUTSCHE ZUSAMMENARBEIT

Malteser International

DAMA

All dimensions in(m)

THIS DRAWINGS IS THE COPYRIGHT OF DAMA,MI&BMZ/ IRAQ . IT IS NOT ALLOWED TO COPY OR REPRODUCE ITS CONTENTS IN ANY FORM WITHOUT THEIR APPROVAL

CERTAIN DRAWINGS ARE NTS (NOT TO SCALED). TECHNICAL NOTES & SPECIFICATION SHALL BE REFERENCED

مكتب باور
المهندس
رهان الدين محمد امين
BAWER OFFICE

No.	Revision/Issue	Date

Medical Door detail

Physical Rehabilitation Center-Telafer Hospital

A15

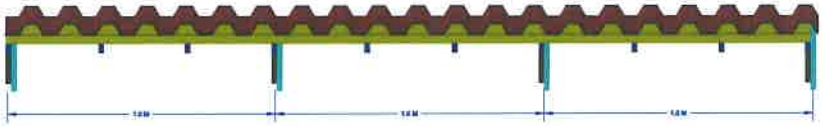

Shade front elevation

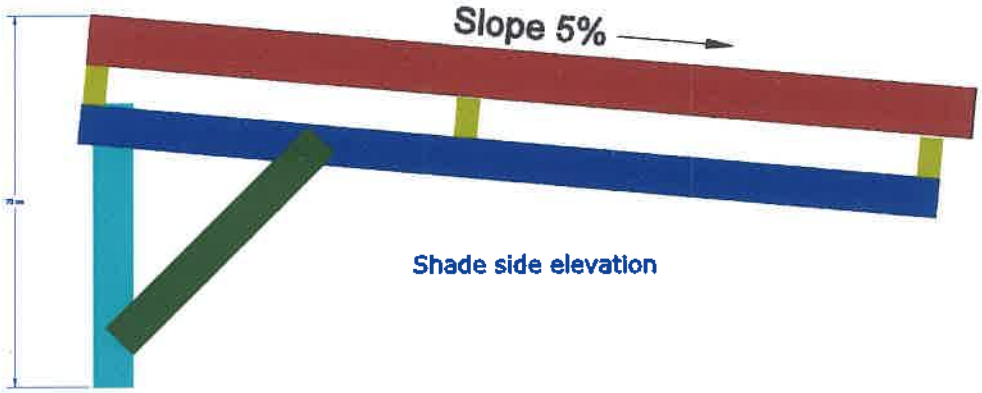

Shade side elevation

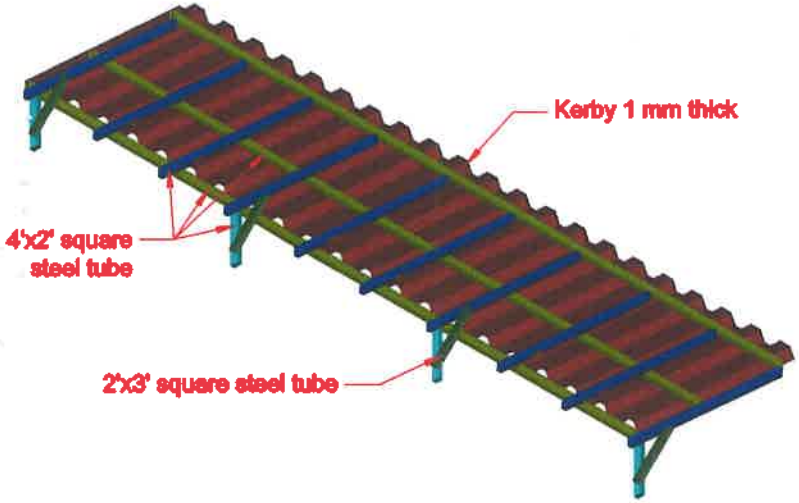

Shade view from buttom

Shade plan

General Notes

german cooperation
DEUTSCHE ZUSAMMENARBEIT

Malteser International

DAMA

THIS DRAWINGS IS THE COPYRIGHT OF DAMA,MI&BMZ/ IRAQ . IT IS NOT ALLOWED TO COPY OR REPRODUCE ITS CONTENTS IN ANY FORM WITHOUT THEIR APPROVAL

CERTAIN DRAWINGS ARE NTS (NOT TO SCALED). TECHNICAL NOTES & SPECIFICATION SHALL BE REFERENCED

مكتب باور
المهندس
برهان الدين محمد امين
BAWER OFFICE

No.	Revision/Issue	Date

Project Name and Address

Shade for Water Heater

Project Name and Address

Physical Rehabilitation Center-Telafer Hospital

Project	Sheet
Date	A16
Scale	

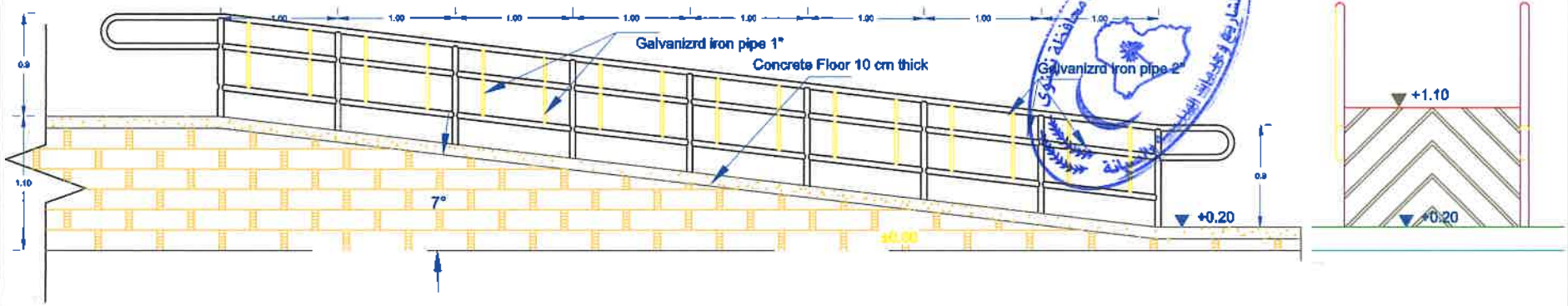

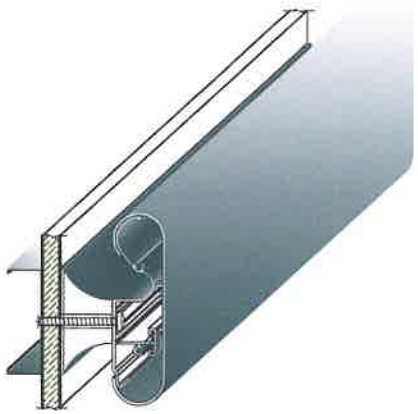

Corridor walls Handrail
Sample 1(Isometric)

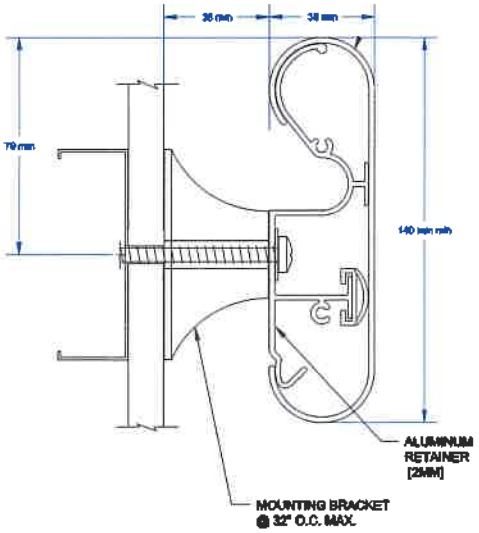

Corridor walls Handrail
Sample 1

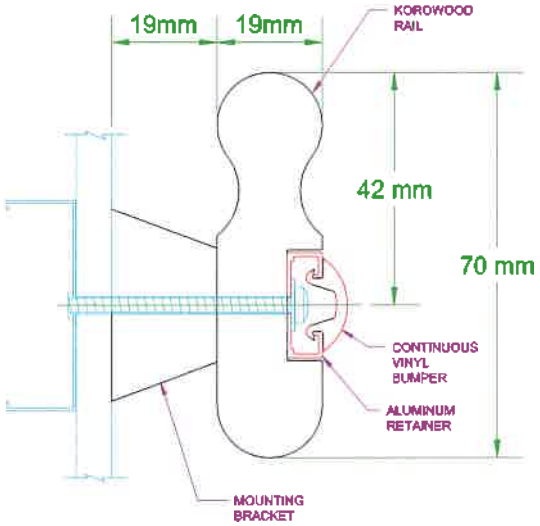

Corridor walls Handrail
Sample 2

General Notes

german cooperation
DEUTSCHE ZUSAMMENARBEIT

Malteser International

DAMA

All dimensions in(m)

THIS DRAWINGS IS THE COPYRIGHT OF DAMA,MI&BMZ/ IRAQ . IT IS NOT ALLOWED TO COPY OR REPRODUCE ITS CONTENTS IN ANY FORM WITHOUT THEIR APPROVAL

CERTAIN DRAWINGS ARE NTS (NOT TO SCALED). TECHNICAL NOTES & SPECIFICATION SHALL BE REFERENCED

مكتب باور
المهندس
زهان الدين محمد امين
BAWER OFFICE

No.	Revision/Issue	Date

Firm Name and Address

Handicap Ramp H.handrail

Project Name and Address

Physical Rehabilitation Center-Telafer Hospital

Project
Date
Scale
Sheet
A17

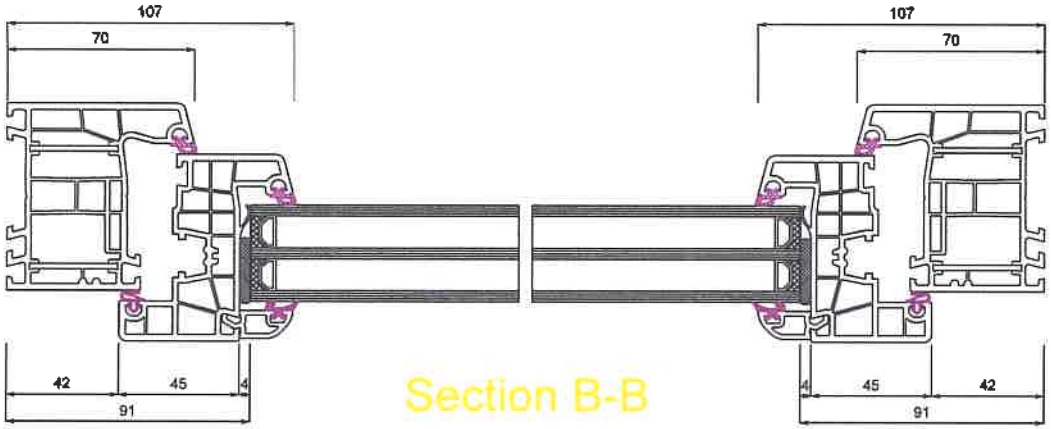

Section B-B

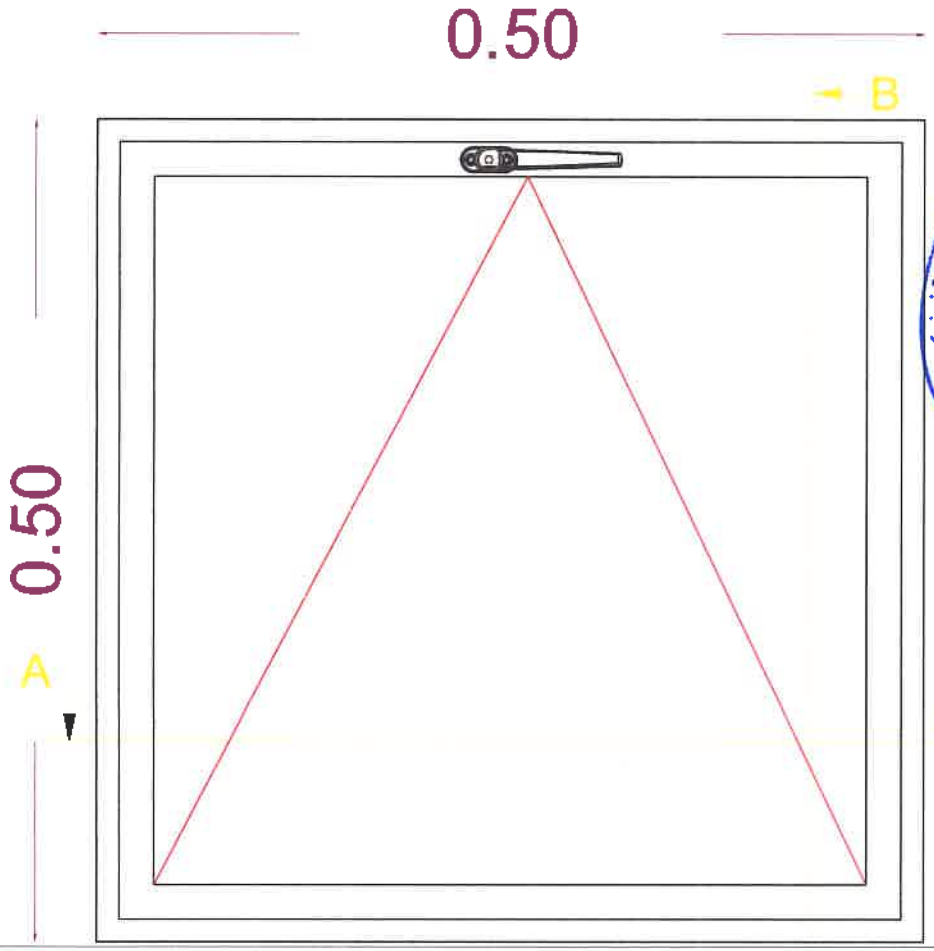

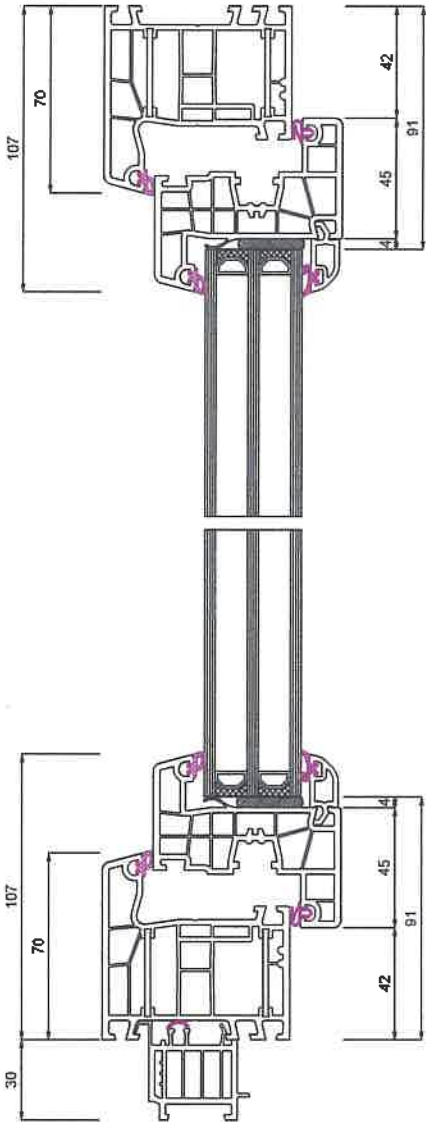

Section A-A

General Notes

german cooperation
DEUTSCHE ZUSAMMENARBEIT

Malteser International

DAMA

All dimensions in(m)

THIS DRAWINGS IS THE COPYRIGHT OF DAMA,MI&BMZ/ IRAQ . IT IS NOT ALLOWED TO COPY OR REPRODUCE ITS CONTENTS IN ANY FORM WITHOUT THEIR APPROVAL

CERTAIN DRAWINGS ARE NTS (NOT TO SCALED). TECHNICAL NOTES & SPECIFICATION SHALL BE REFERENCED

مكتب باور
المهندس
زهان الدين محمد امين
BAWER OFFICE

No.	Revision/Issue	Date

Firm Name and Address

Aluminium WC window detail

Project Name and Address

Physical Rehabilitation Center-Telafer Hospital

Project	Sheet
Date	A18
Work	

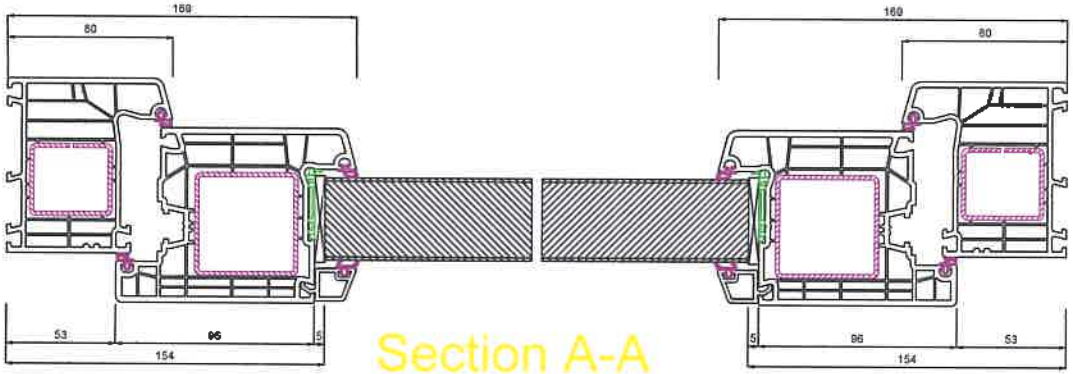

Section A-A

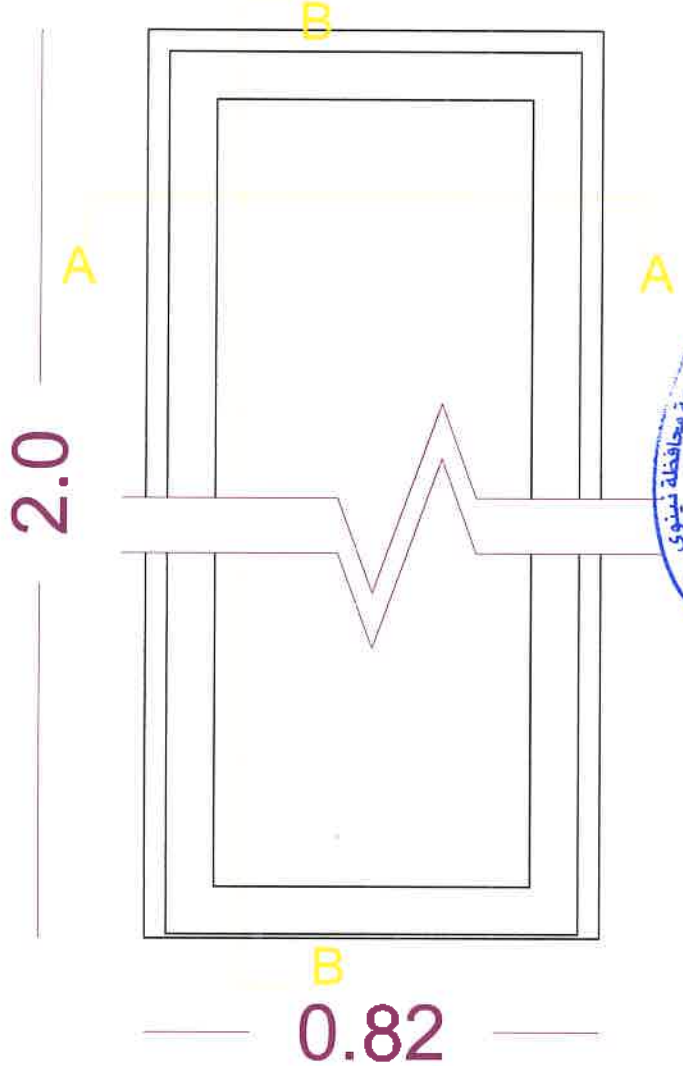

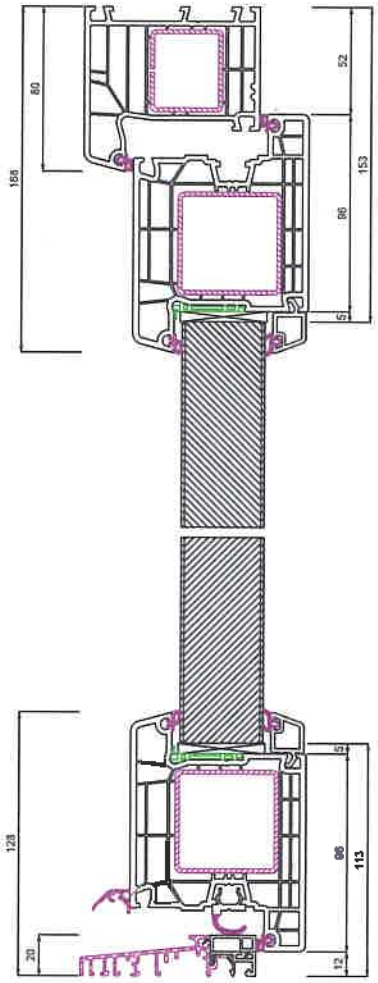

Section B-B

General Notes

german cooperation
DEUTSCHE ZUSAMMENARBEIT

Malteser International

DAMA

All dimensions in(m)

THIS DRAWINGS IS THE COPYRIGHT OF DAMA,MI&BMZ/ IRAQ . IT IS NOT ALLOWED TO COPY OR REPRODUCE ITS CONTENTS IN ANY FORM WITHOUT THEIR APPROVAL

CERTAIN DRAWINGS ARE NTS (NOT TO SCALED). TECHNICAL NOTES & SPECIFICATION SHALL BE REFERENCED

مكتب باور
المهندس
زهان الدين محمد امين
BAWER OFFICE

No.	Revision/Issue	Date

P.V.C
door detail

Physical Rehabilitation Center-Telafer Hospital

A19

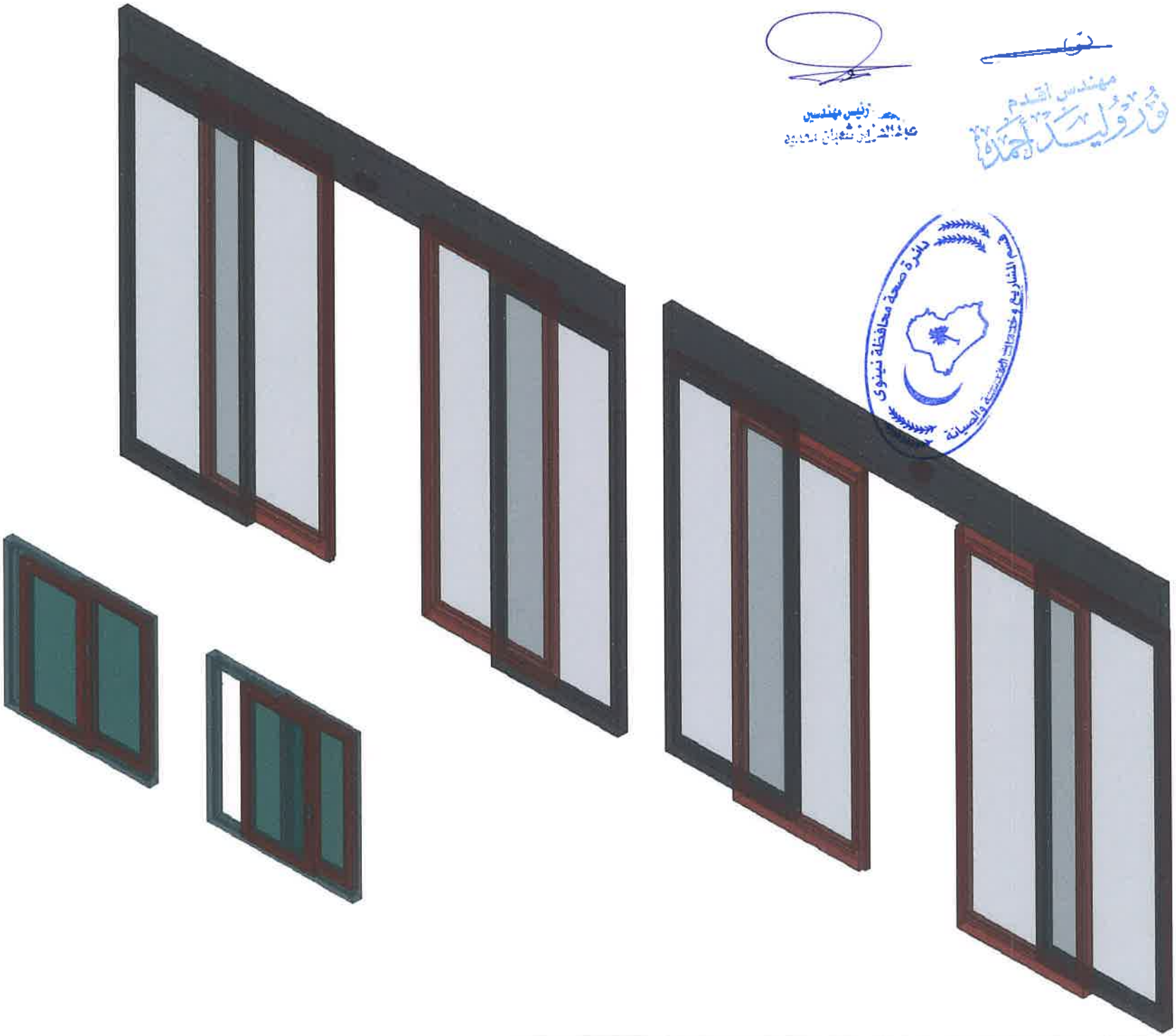

رئيس مهندسين
عبد الرزاق شعبان محمد

مهندس اقدم
وليد احمد

دائرة صحة محافظة نينوى
قسم المشاريع وخدمات الهندسة والصيانة

General Notes

german cooperation
DEUTSCHE ZUSAMMENARBEIT

Malteser International

DAMA

All dimensions in(m)

THIS DRAWINGS IS THE COPYRIGHT OF DAMA,MI&BMZ/ IRAQ . IT IS NOT ALLOWED TO COPY OR REPRODUCE ITS CONTENTS IN ANY FORM WITHOUT THEIR APPROVAL

CERTAIN DRAWINGS ARE NTS (NOT TO SCALED). TECHNICAL NOTES & SPECIFICATION SHALL BE REFERENCED

مكتب باور
المهندس
زهان الدين محمد امين
BAWER OFFICE

No.	Revision/Issue	Date

Sliding Door& window 3D

Physical Rehabilitation Center-Telafer Hospital

Project:
Date:
Scale:
Sheet: A20

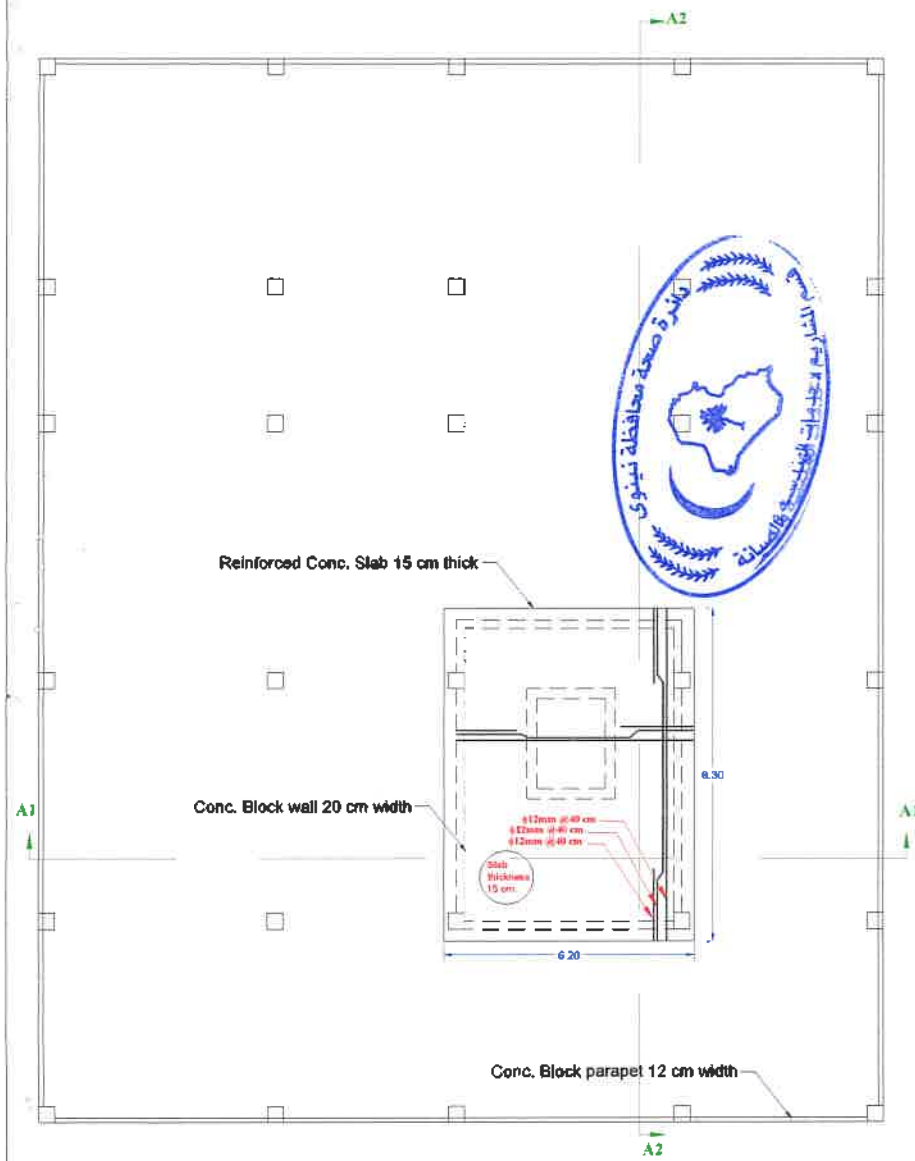

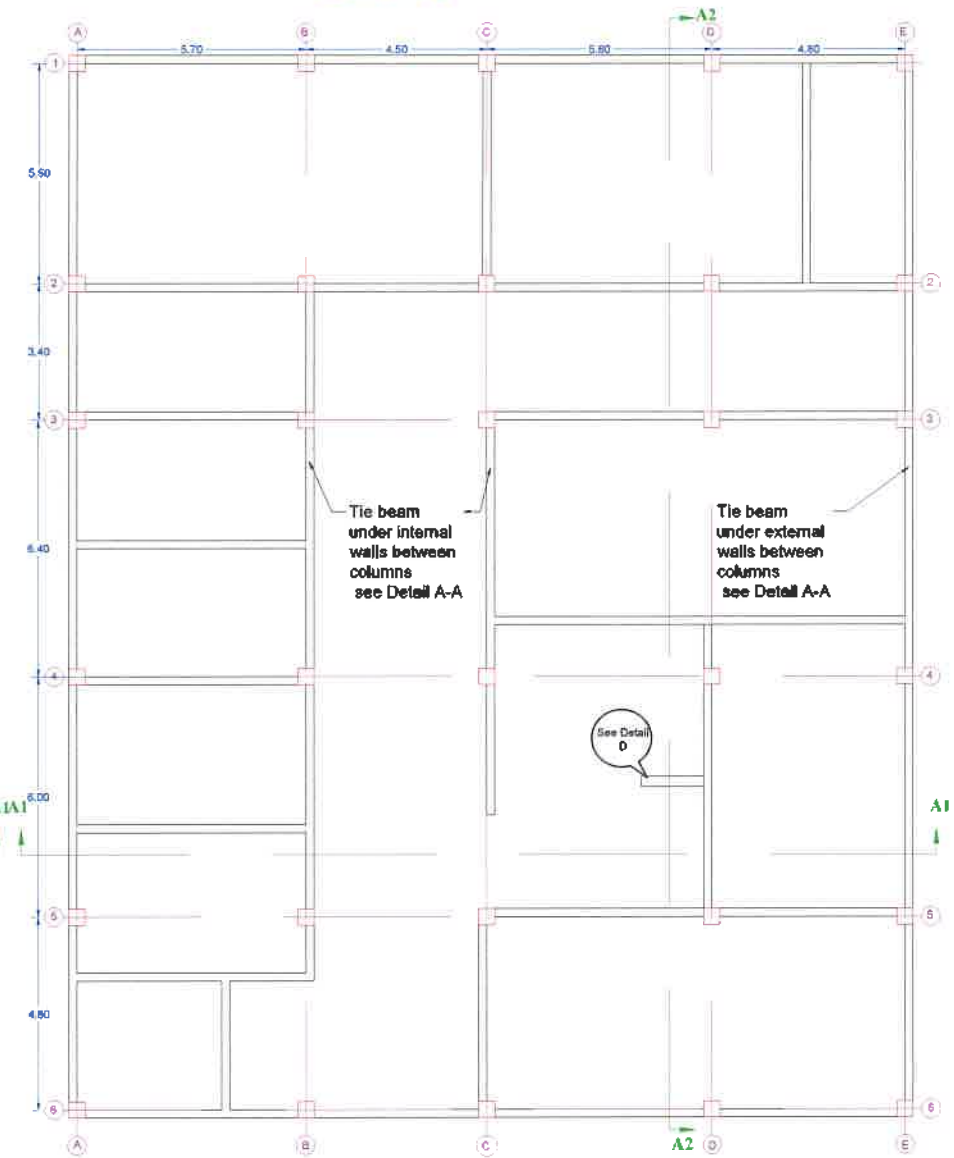

General Notes

german cooperation
DEUTSCHE ZUSAMMENARBEIT

Malteser International

DAMA

All dimensions in(m)

THIS DRAWINGS IS THE COPYRIGHT OF DAMA,MI&BMZ/ IRAQ . IT IS NOT ALLOWED TO COPY OR REPRODUCE ITS CONTENTS IN ANY FORM WITHOUT THEIR APPROVAL

CERTAIN DRAWINGS ARE NTS (NOT TO SCALED). TECHNICAL NOTES & SPECIFICATION SHALL BE REFERENCED

مكتب باور
المهندس
زهان الدين محمد امين
BAWER OFFICE

No.	Revision/Issue	Date

File Name and Address

Attic,Parapets &Tie beams

Project Name and Address

Physical Rehabilitation Center-Telafer Hospital

Project
Date
Scale
Sheet

S01

Section A1-A1(in slab only)

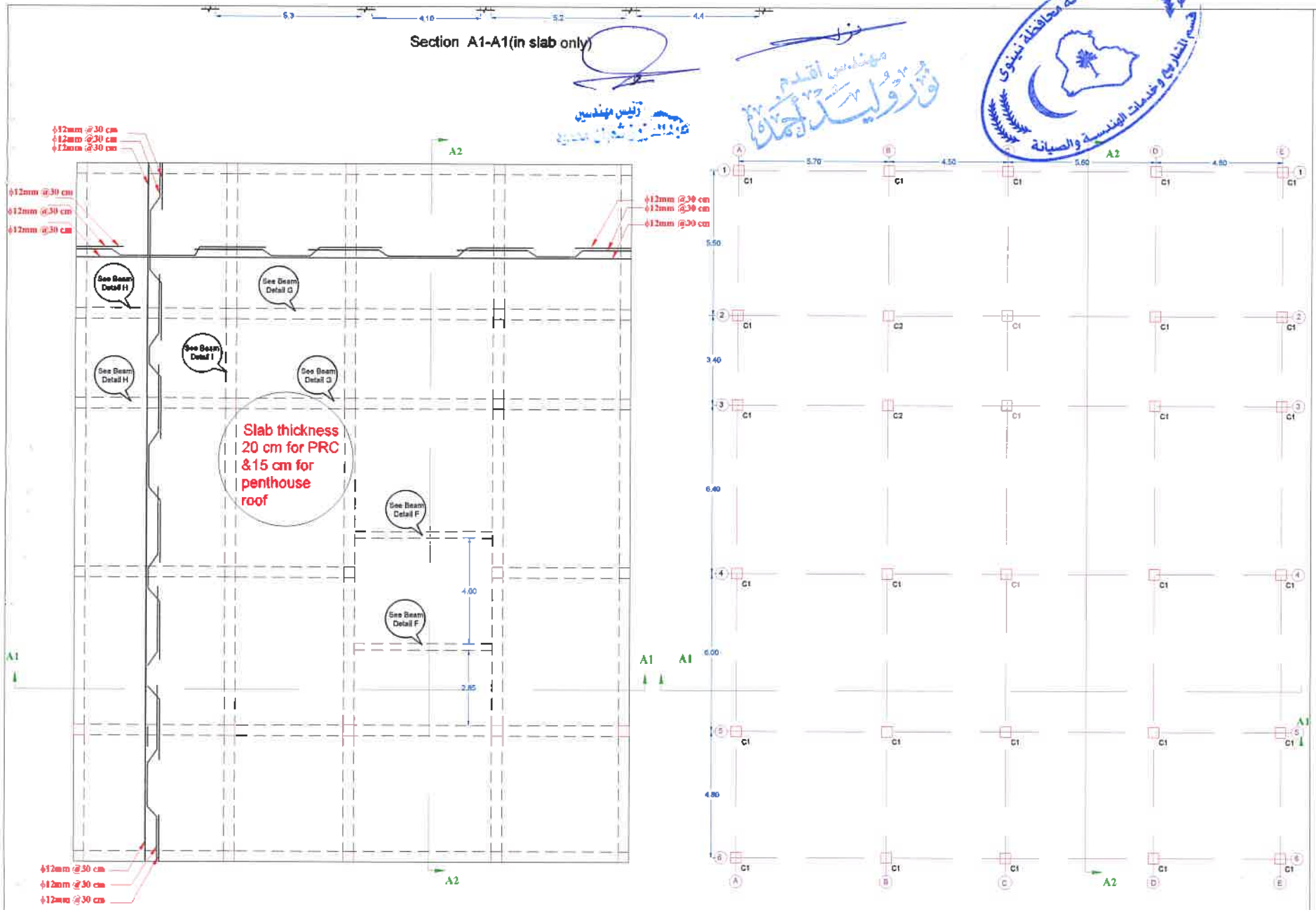

General Notes

german cooperation
DEUTSCHE ZUSAMMENARBEIT

Malteser International

DAMA

All dimensions in(m)

THIS DRAWINGS IS THE COPYRIGHT OF DAMA,MI&BMZ/ IRAQ . IT IS NOT ALLOWED TO COPY OR REPRODUCE ITS CONTENTS IN ANY FORM WITHOUT THEIR APPROVAL

CERTAIN DRAWINGS ARE NTS (NOT TO SCALED). TECHNICAL NOTES & SPECIFICATION SHALL BE REFERENCED

مكتب باور
المهندس
زهان الدين محمد
BAWER OFFICE

No.	Revision/Issue	Date

File Name and Address

Grids,Beams, slab&columns

Project Name and Address

Physical Rehabilitation Center-Telafer Hospital

Project

Date

Code

Sheet

S02

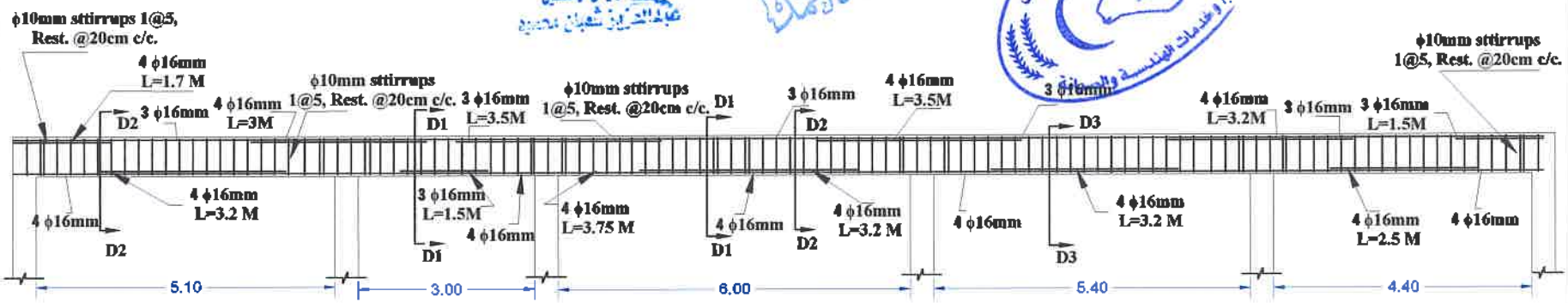

Section A2-A2

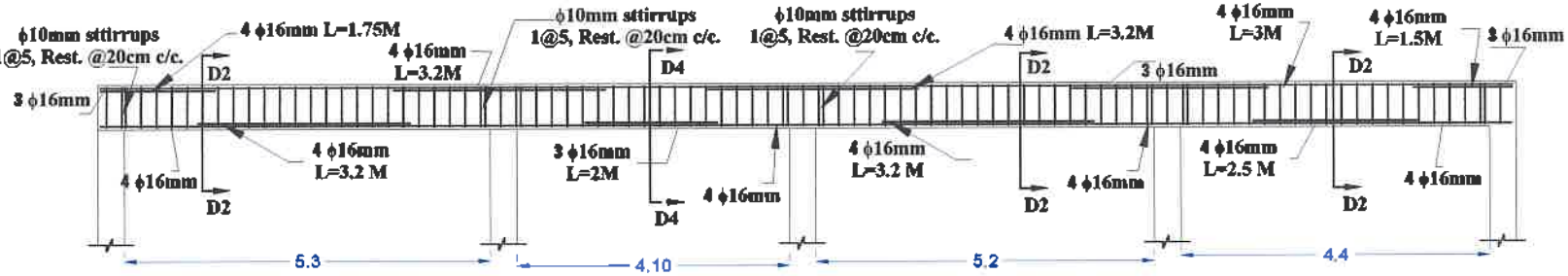

Section A1-A1

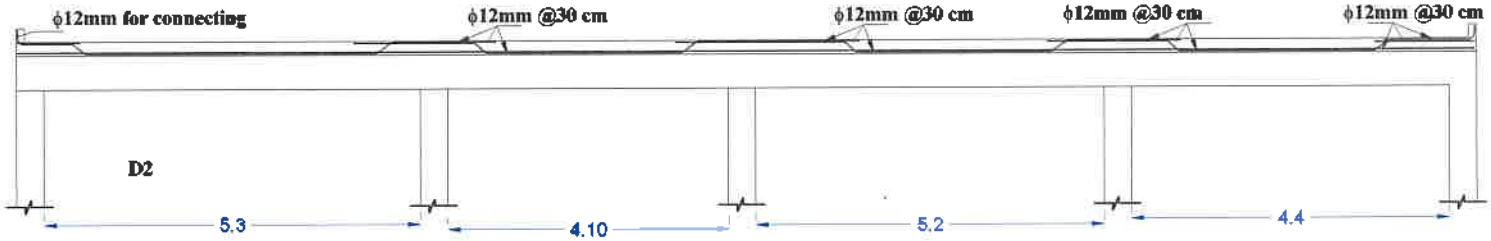

Section A1-A1(in slab only)

General Notes

german cooperation
DEUTSCHE ZUSAMMENARBEIT

Malteser International

DAMA

All dimensions in(m)

THIS DRAWINGS IS THE COPYRIGHT OF DAMA,MI&BMZ/ IRAQ . IT IS NOT ALLOWED TO COPY OR REPRODUCE ITS CONTENTS IN ANY FORM WITHOUT THEIR APPROVAL

CERTAIN DRAWINGS ARE NTS (NOT TO SCALED). TECHNICAL NOTES & SPECIFICATION SHALL BE REFERENCED

مكتب باور
المهندس
زهان الدين محمد امين
BAWER OFFICE

No.	Revision/Issue	Date

Slab&Beam Reinforcement

Physical Rehabilitation Center-Telafer Hospital

Project
Date
Scale
Sheet
S03

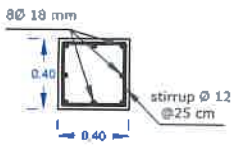

Column

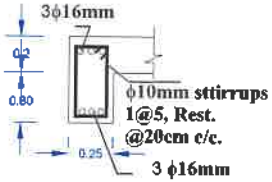

Beam detail F

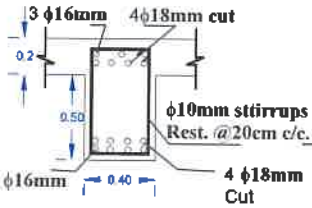

Sec. D3-D3

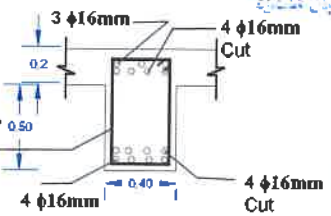

Sec. D2-D2

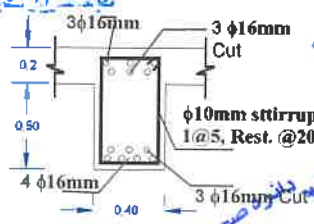

Sec. D1-D1

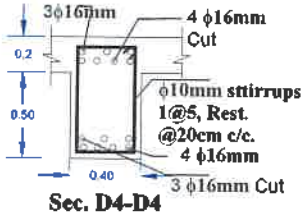

Sec. D4-D4

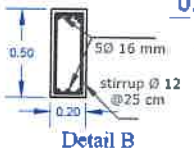

Detail B
Tie Beam under walls

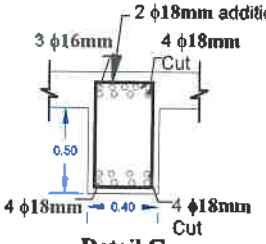

Detail G

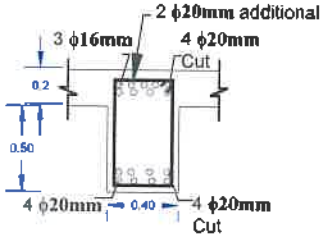

Detail H

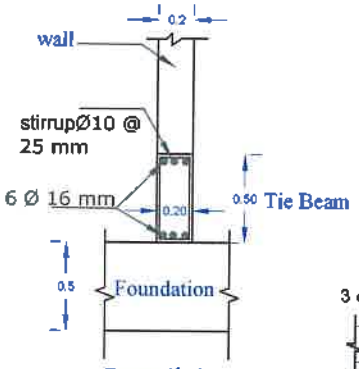

Detail A-A
Tie Beam under walls

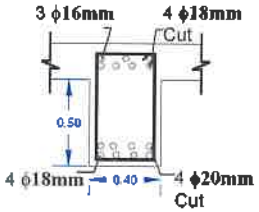

Detail I

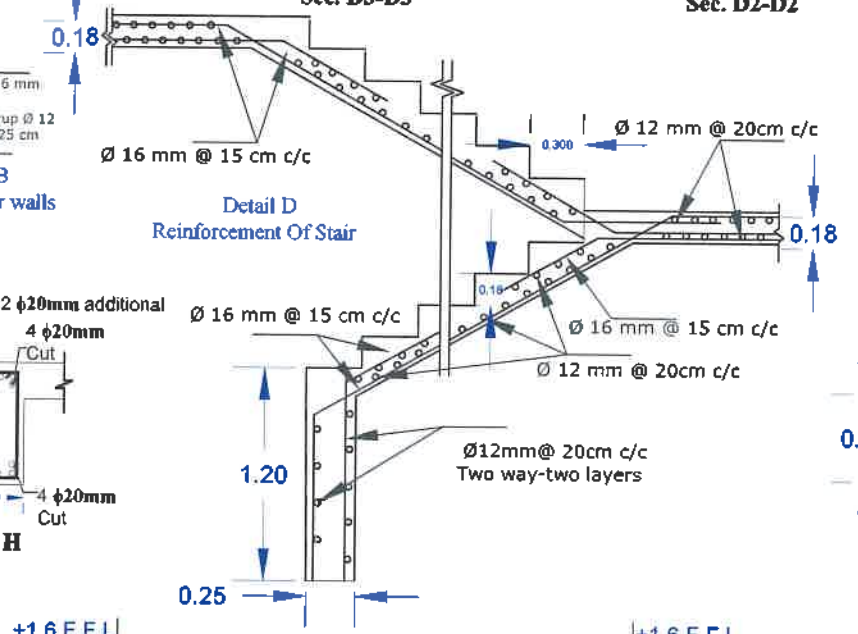

Detail D
Reinforcement Of Stair

Raft Foundation

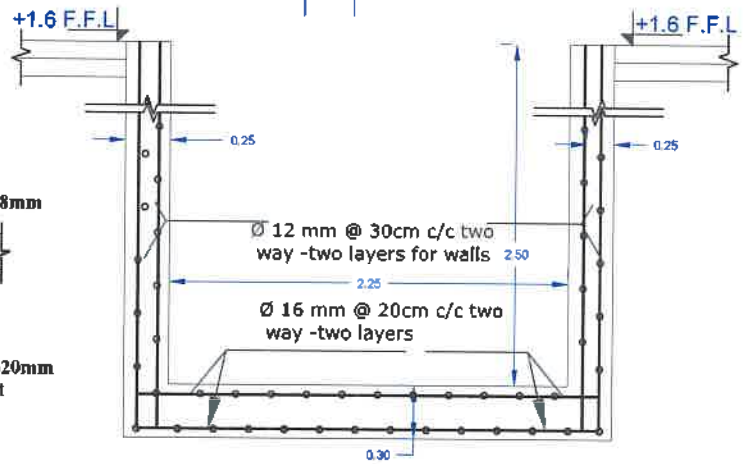

Detail C
Lift reinf. Section for walls and base

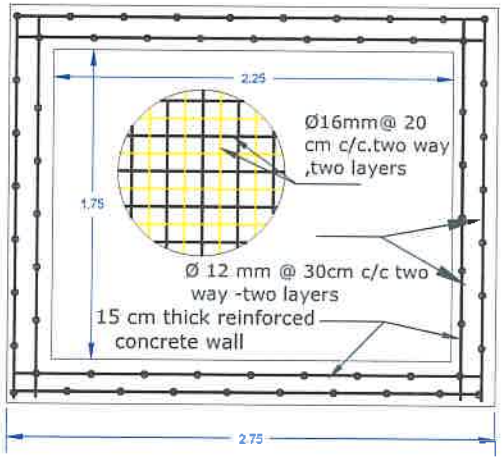

Detail C
Lift reinf. plan for walls and base

General Notes

german cooperation
DEUTSCHE ZUSAMMENARBEIT

Malteser International

DAMA

All dimensions in(m)

THIS DRAWINGS IS THE COPYRIGHT OF DAMA,MI&BMZ/ IRAQ . IT IS NOT ALLOWED TO COPY OR REPRODUCE ITS CONTENTS IN ANY FORM WITHOUT THEIR APPROVAL

CERTAIN DRAWINGS ARE NTS (NOT TO SCALED). TECHNICAL NOTES & SPECIFICATION SHALL BE REFERENCED

مكتب باور
المهندس
زهان الدين محمد امين
BAWER OFFICE

No	Revision/Issue	Date

Plan Name and Address

Reinforcement Details

Project name and Address

Physical Rehabilitation Center-Telafer Hospital

Project | Sheet
Date
Scale

S04

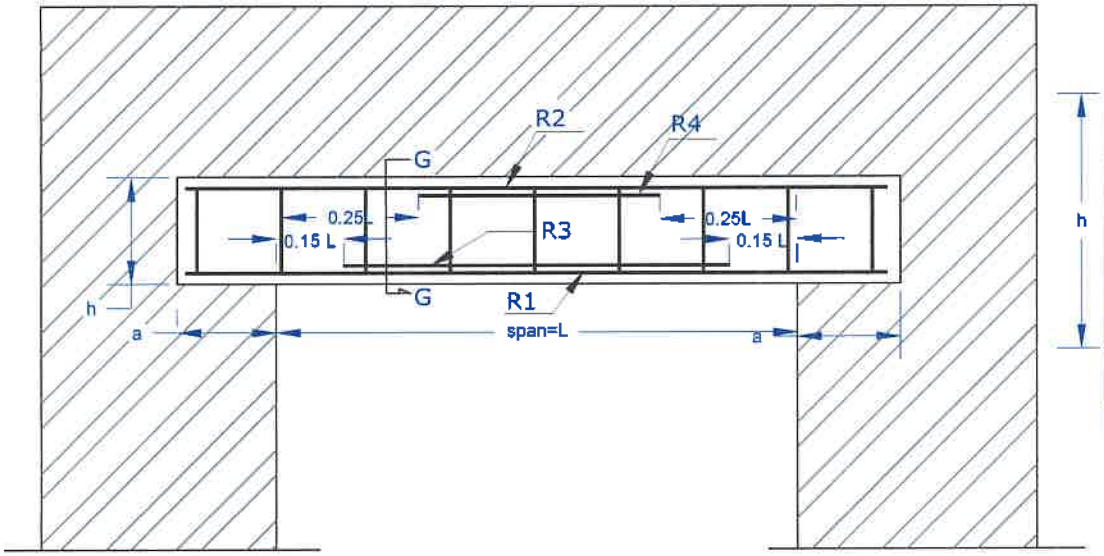

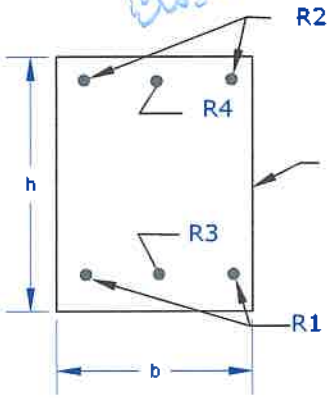

Section G-G

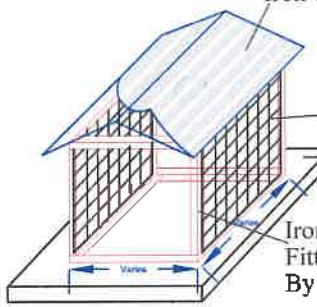

Water Pumps Base Frame

Opening Lintels Details Schedule

Span (L) mm	b mm	h mm	a mm	Reinforcement R1	R2	R3	R4	Stirrups
≤ 1000	240	200	200	2 @ 12	2 @ 12	–	–	Ø 10 @ 200
	360	300	300	3 @ 12	3 @ 12	–	–	Ø 10 @ 200
> 1000 ≤ 2000	240	250	250	2 @ 12	2 @ 12	1 @ 12	1 @ 12	Ø 10 @ 200
	360	350	350	2 @ 12	2 @ 12	2 @ 12	2 @ 12	Ø 10 @ 200
> 2000 ≤ 3000	240	350	350	2 @ 16	2 @ 16	1@ 16	1@ 16	Ø 10 @ 150
	360	500	500	2 @ 16	2 @ 16	2 @ 16	2 @ 16	Ø 10 @ 150
> 3000 ≤ 4000	240	350	350	2 @ 16	2 @ 16	2 @ 16	2 @ 16	Ø 10 @ 150
	360	500	500	2 @ 16	2 @ 16	3 @ 16	2 @ 16	Ø 10 @ 150
> 4000 ≤ 5000	240	350	350	2 @ 16	2 @ 16	3 @ 16	2 @ 16	Ø 10 @ 150
	360	500	500	2 @ 16	2 @ 16	4 @ 16	2 @ 16	Ø 10 @ 150

Remarks

1- Reinforcement Bars shall be deformed high strength steel bars of characteristic strength of 414 Mpa complying with ASTM standards or equivalent for diameters 12mm & above . and 276 MPa for diameters 10mm & below .

2- Reinforced concrete cement content in M3
400 Kg for Columns. 350 Kg for slabs , beams, lift walls &foundation. 300 Kg for floors.

3. COVER
Clear concrete cover to reinforcement shall be :
50mm for concrete below grade.
30mm for columns & beams.
25mm for walls, slabs and joists.

4) 90 Standard End Hooks To Be Used For (R1,R2 And R4) Reinforcement

General Notes

german cooperation
DEUTSCHE ZUSAMMENARBEIT

Malteser International

DAMA

All dimensions in(m)

THIS DRAWINGS IS THE COPYRIGHT OF DAMA,MI&BMZ/ IRAQ . IT IS NOT ALLOWED TO COPY OR REPRODUCE ITS CONTENTS IN ANY FORM WITHOUT THEIR APPROVAL

CERTAIN DRAWINGS ARE NTS (NOT TO SCALED). TECHNICAL NOTES & SPECIFICATION SHALL BE REFERENCED

No.	Revision/Issue	Date

Water Pump details&lintels

Physical Rehabilitation Center-Telafer Hospital

Sheet S05

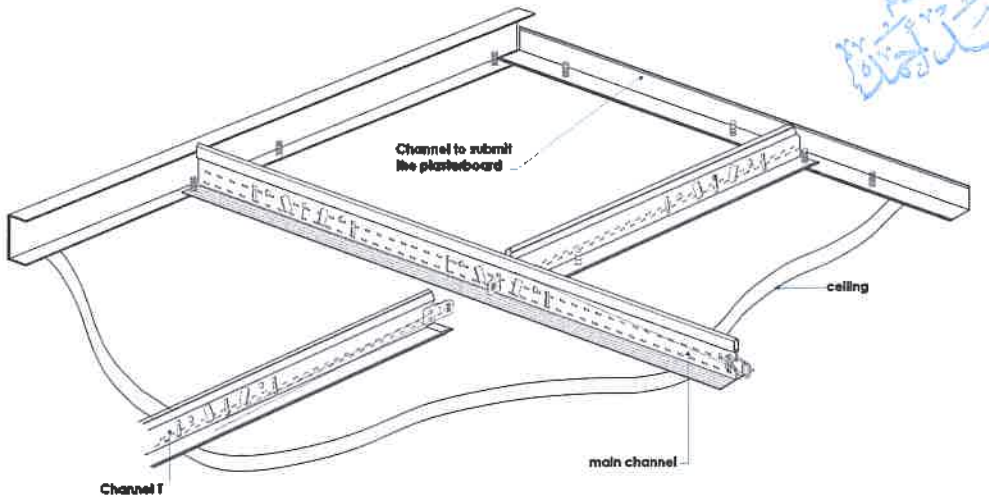

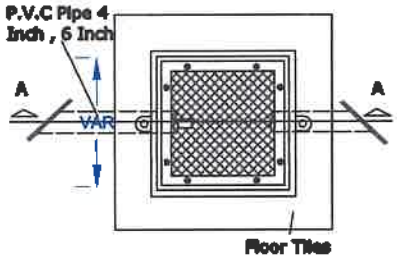

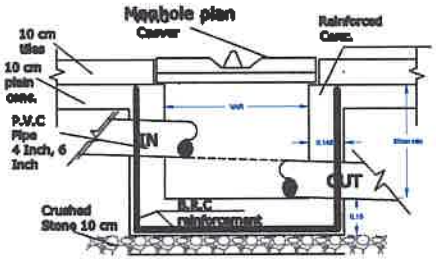

Section A-A
Typical Manhole

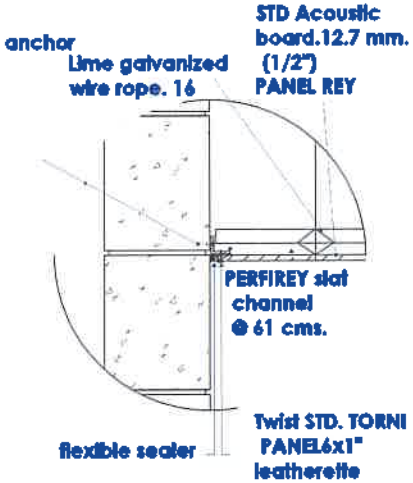

Detail 1 False ceiling

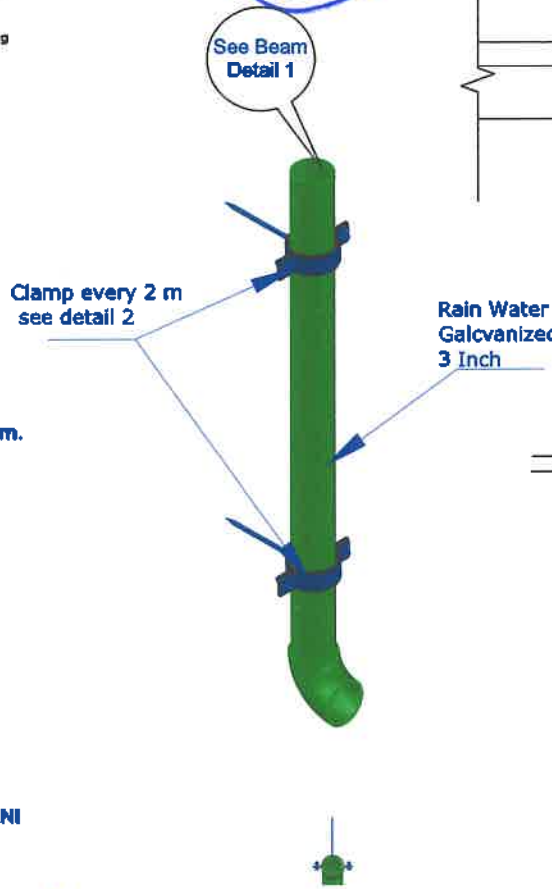

detail 2

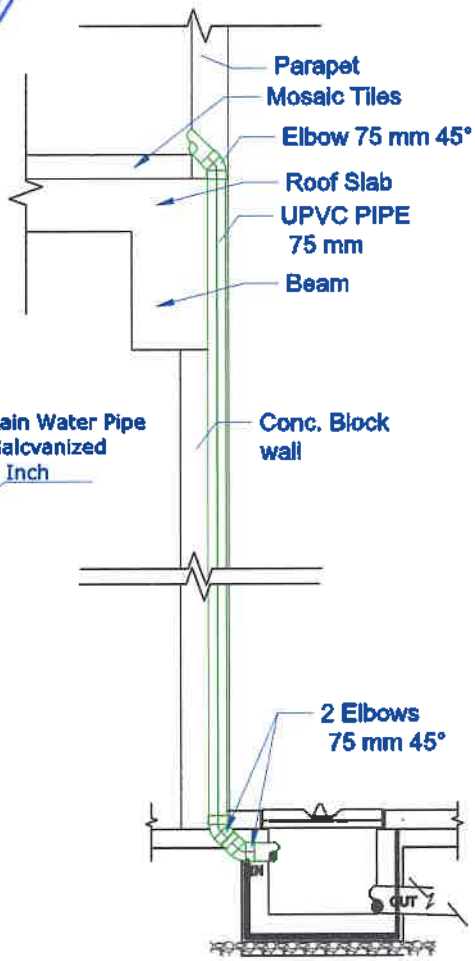

detail 1

General Notes

german cooperation
DEUTSCHE ZUSAMMENARBEIT

Malteser International

DAMA

All dimensions in(m)

THIS DRAWINGS IS THE COPYRIGHT OF DAMA,MI&BMZ/ IRAQ . IT IS NOT ALLOWED TO COPY OR REPRODUCE ITS CONTENTS IN ANY FORM WITHOUT THEIR APPROVAL

CERTAIN DRAWINGS ARE NTS (NOT TO SCALED). TECHNICAL NOTES & SPECIFICATION SHALL BE REFERENCED

مكتب باور
المهندس
زهان الدين محمد امين
BAWER OFFICE

No.	Revision/Issue	Date

Arch Sanitary& Details

Physical Rehabilitation Center-Telafer Hospital

SA01

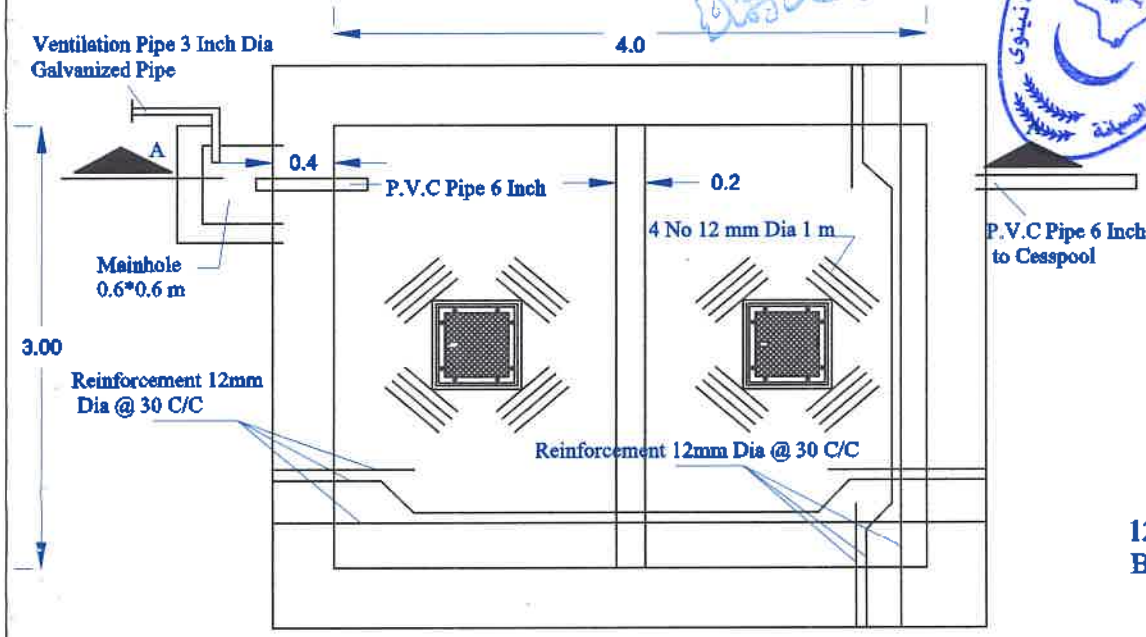

Septic Tank Details

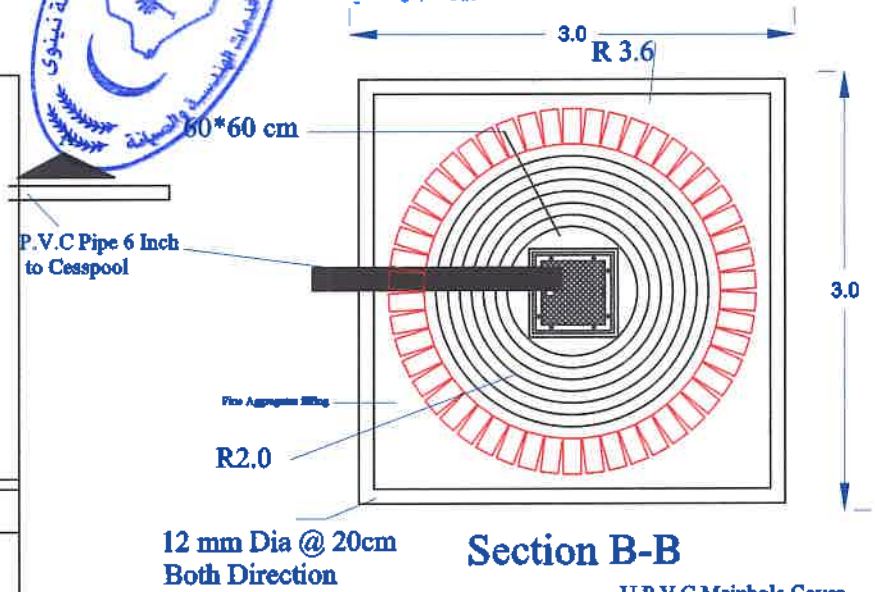

Section B-B

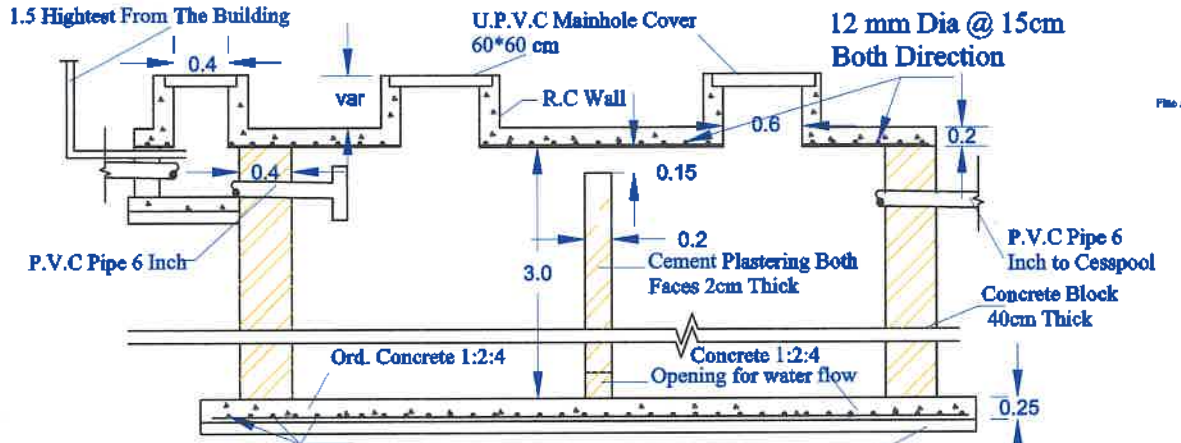

Section A-A

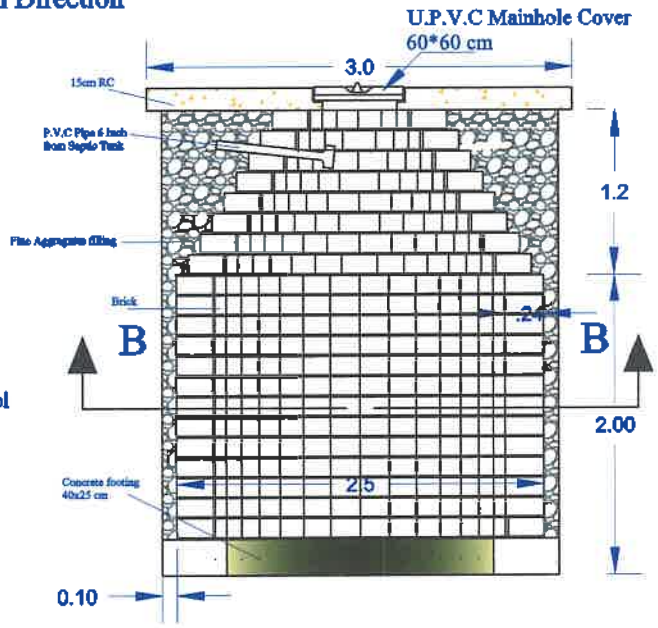

Cesspool (Type A) In Clay Soil

General Notes

german cooperation
DEUTSCHE ZUSAMMENARBEIT

Malteser International

DAMA

All dimensions in(m)

THIS DRAWINGS IS THE COPYRIGHT OF DAMA,MI&BMZ/ IRAQ . IT IS NOT ALLOWED TO COPY OR REPRODUCE ITS CONTENTS IN ANY FORM WITHOUT THEIR APPROVAL

CERTAIN DRAWINGS ARE NTS (NOT TO SCALED). TECHNICAL NOTES & SPECIFICATION SHALL BE REFERENCED

مكتب باور
المهندس
زهان الدين محمد امين
BAWER OFFICE

No.	Revision/Issue	Date

Project Name and Address

SepticTank &Cesspool

Project Name and Address

Physical Rehabilitation Center-Telafer Hospital

Project	Sheet
Date	
Scale	SA02

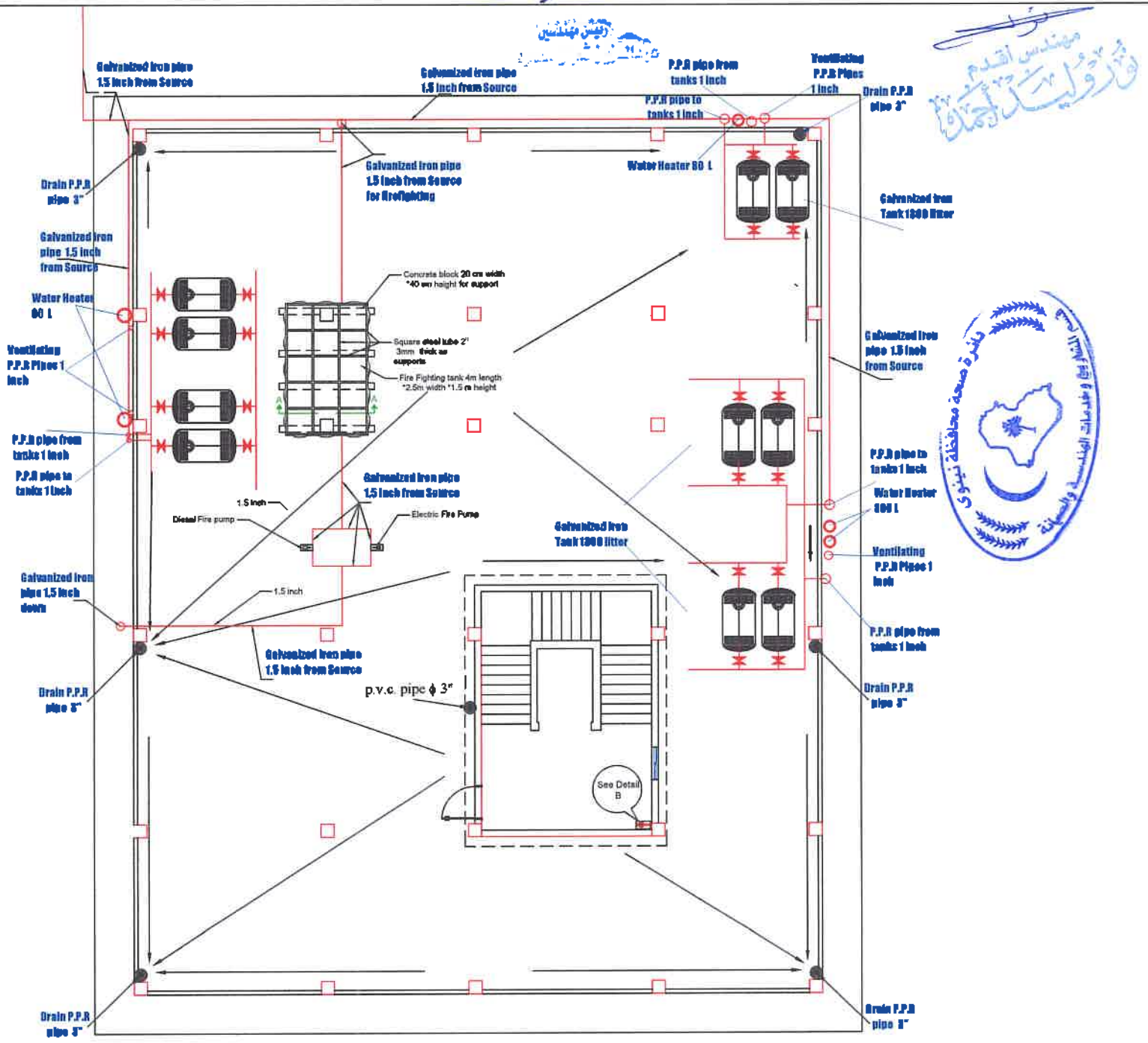

General Notes

german cooperation
DEUTSCHE ZUSAMMENARBEIT

Malteser International

DAMA

All dimensions in(m)

THIS DRAWINGS IS THE COPYRIGHT OF DAMA,MI&BMZ/ IRAQ . IT IS NOT ALLOWED TO COPY OR REPRODUCE ITS CONTENTS IN ANY FORM WITHOUT THEIR APPROVAL

CERTAIN DRAWINGS ARE NTS (NOT TO SCALED). TECHNICAL NOTES & SPECIFICATION SHALL BE REFERENCED

مكتب باور
المهندس
برهان الدين محمد امين
BAWER OFFICE

No.	Revision/Issue	Date

Water Tanks&Roof Drainage

Physical Rehabilitation Center-Telafer Hospital

SA03

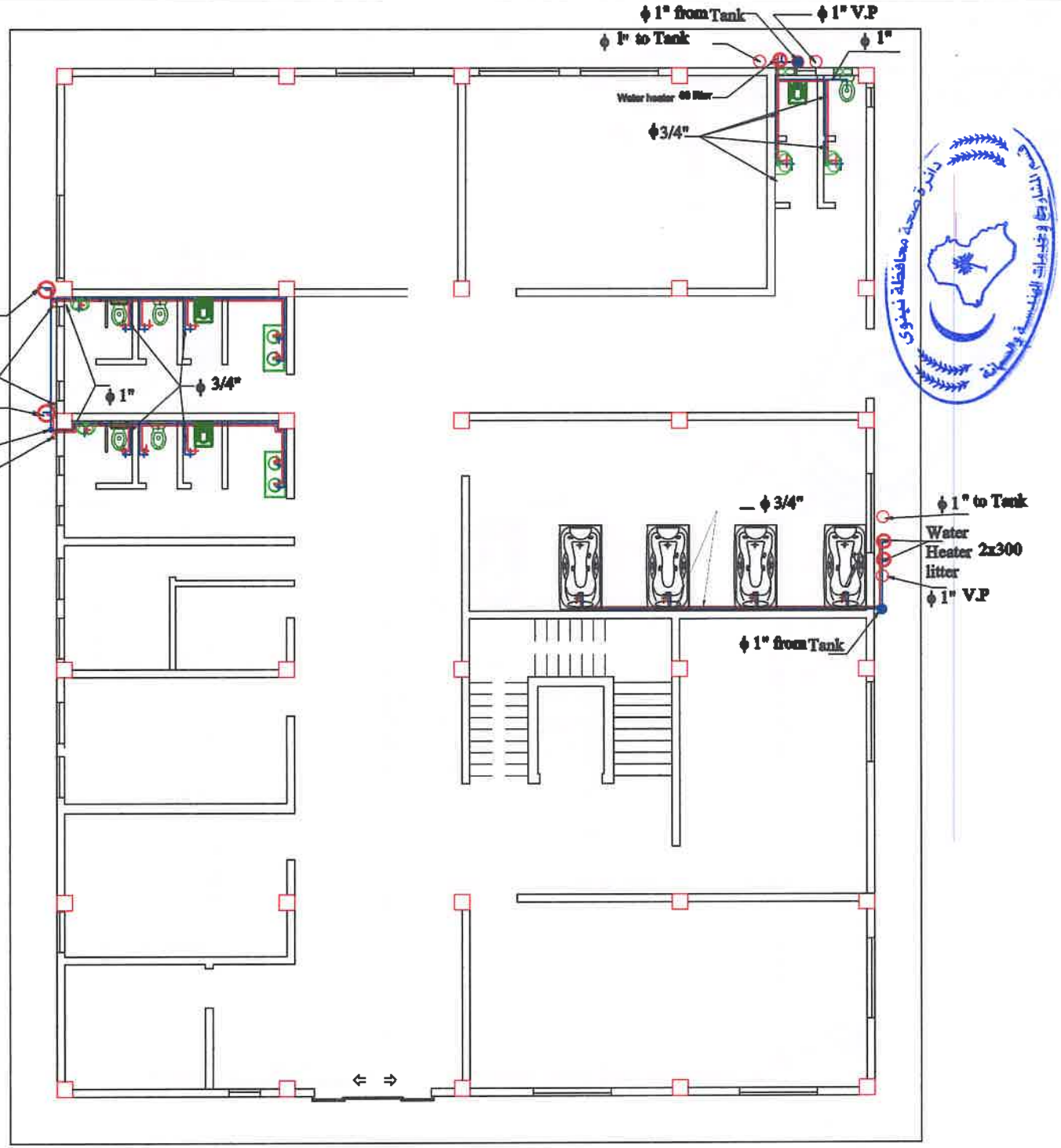

General Notes

german cooperation
DEUTSCHE ZUSAMMENARBEIT

Malteser International

DAMA

All dimensions in(m)

THIS DRAWINGS IS THE COPYRIGHT OF DAMA,MI&BMZ/ IRAQ . IT IS NOT ALLOWED TO COPY OR REPRODUCE ITS CONTENTS IN ANY FORM WITHOUT THEIR APPROVAL

CERTAIN DRAWINGS ARE NTS (NOT TO SCALED). TECHNICAL NOTES & SPECIFICATION SHALL BE REFERENCED

مكتب باور
المهندس
برهان الدين محمد امين
BAWER OFFICE

No.	Revision/Issue	Date

Water Supply net

Physical Rehabilitation Center-Telafer Hospital

SA04

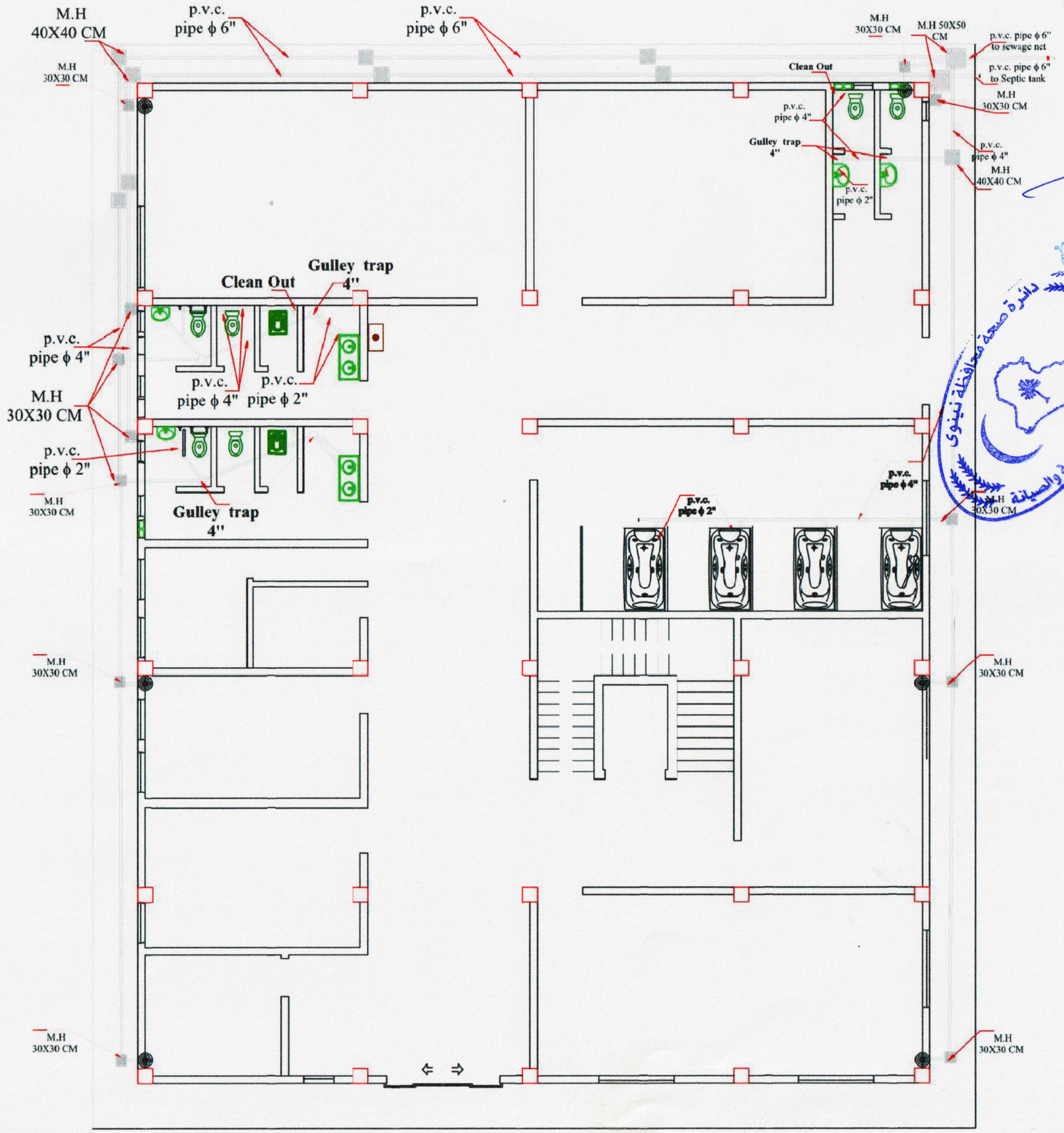

General Notes

german cooperation
DEUTSCHE ZUSAMMENARBEIT

Malteser International
Order of Malta Worldwide Relief

DAMA

All dimensions in(m)

THIS DRAWINGS IS THE COPYRIGHT OF DAMA,MI&BMZ/ IRAQ . IT IS NOT ALLOWED TO COPY OR REPRODUCE ITS CONTENTS IN ANY FORM WITHOUT THEIR APPROVAL

CERTAIN DRAWINGS ARE NTS (NOT TO SCALED). TECHNICAL NOTES & SPECIFICATION SHALL BE REFERENCED

مكتب باور
المهندس
برهان الدين محمد امين
BAWER OFFICE

No.	Revision/Issue	Date

Firm Name and Address

Sewage net

Project Name and Address

Physical Rehabilitation Center-Telafer Hospital

Project	Sheet
Date	SA05
Scale	

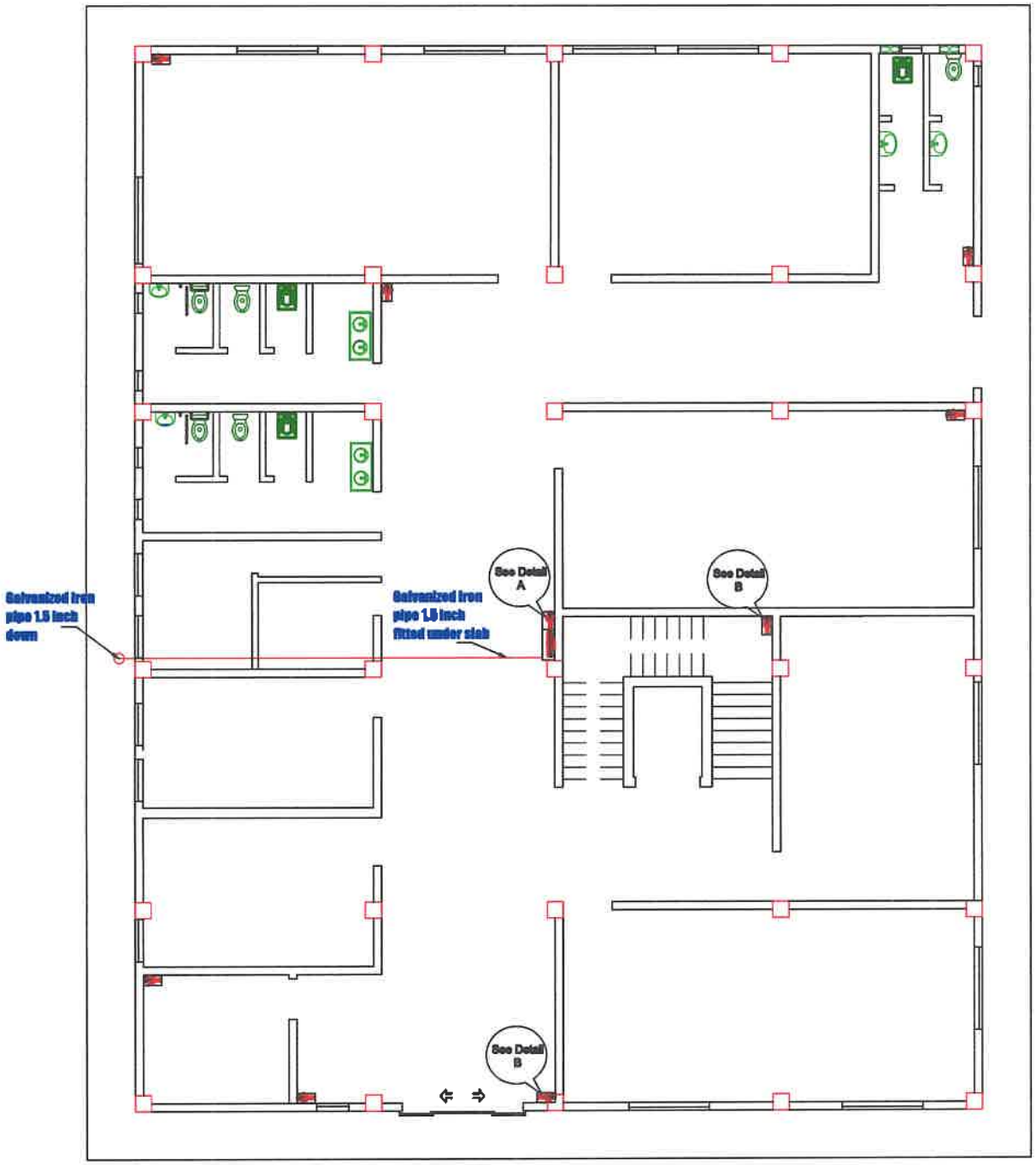

General Notes

german cooperation
DEUTSCHE ZUSAMMENARBEIT

Malteser International

DAMA

All dimensions in(m)

THIS DRAWINGS IS THE COPYRIGHT OF DAMA,MI&BMZ/ IRAQ . IT IS NOT ALLOWED TO COPY OR REPRODUCE ITS CONTENTS IN ANY FORM WITHOUT THEIR APPROVAL

CERTAIN DRAWINGS ARE NTS (NOT TO SCALED). TECHNICAL NOTES & SPECIFICATION SHALL BE REFERENCED

مكتب باور
المهندس
زهان الدين محمد امين
BAWER OFFICE

No.	Revision/Issue	Date

Firm Name and Address

Fire Fighting Layouts

Project Name and Address

Physical Rehabilitation Center-Telafer Hospital

Project	Sheet
Date	SA06
Scale	

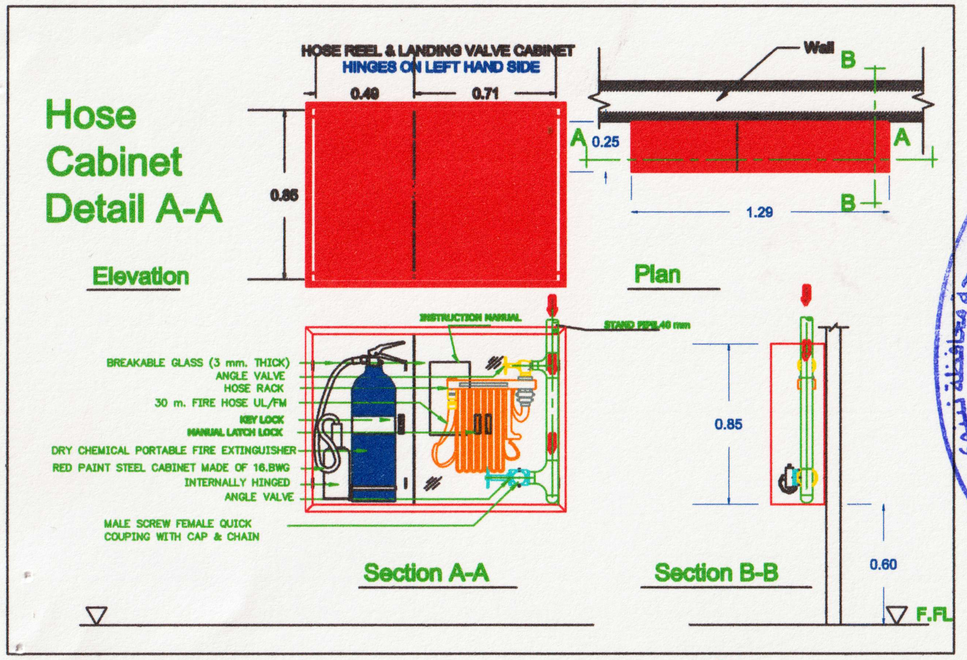

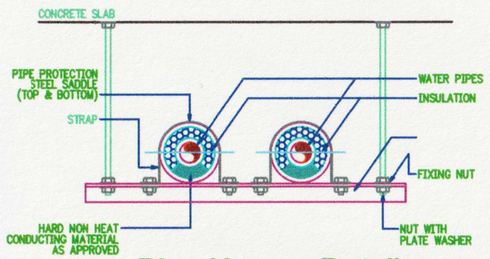

Pipe Hanger Details

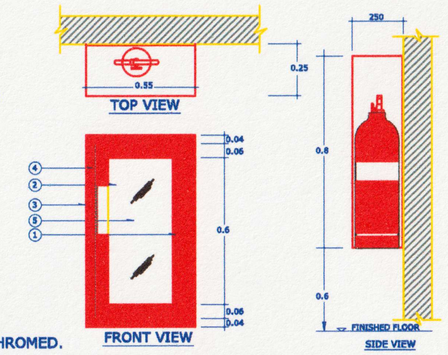

1. PUSH TO OPEN LOCKABLE DEVICE, KEYED LOCK, FINISHED CHROMED.
2. SAFETY GLASS 5 mm. THICK DOOR PANEL.
3. SURFACE TYPE CABINET MADE OF 1.6 mm.(16 GAUGE) STEEL WITH STEEL TRIM & DOORFRAME, DOOR TO BE FURNISHED WITH CONTINUOUS STEEL HING (BRASS PIN), WITH PUSH TO OPEN LOCKABLE DEVICE, KEYED ALIKE, CABINET SHALL BE CLEANED & COATED WITH PHOSPHATE SOLUTION PRIOR TO BEING FINISHED WITH BAKED ON RED PAINTING (OSHA RED)
4. CONTINUOUS STEEL HINGE WITH BRASS PIN.
5. CO2 FIRE EXTINGUISHER, 6 Kg.(10LB)

Fire Extinguisher Cabinet Detail B-B

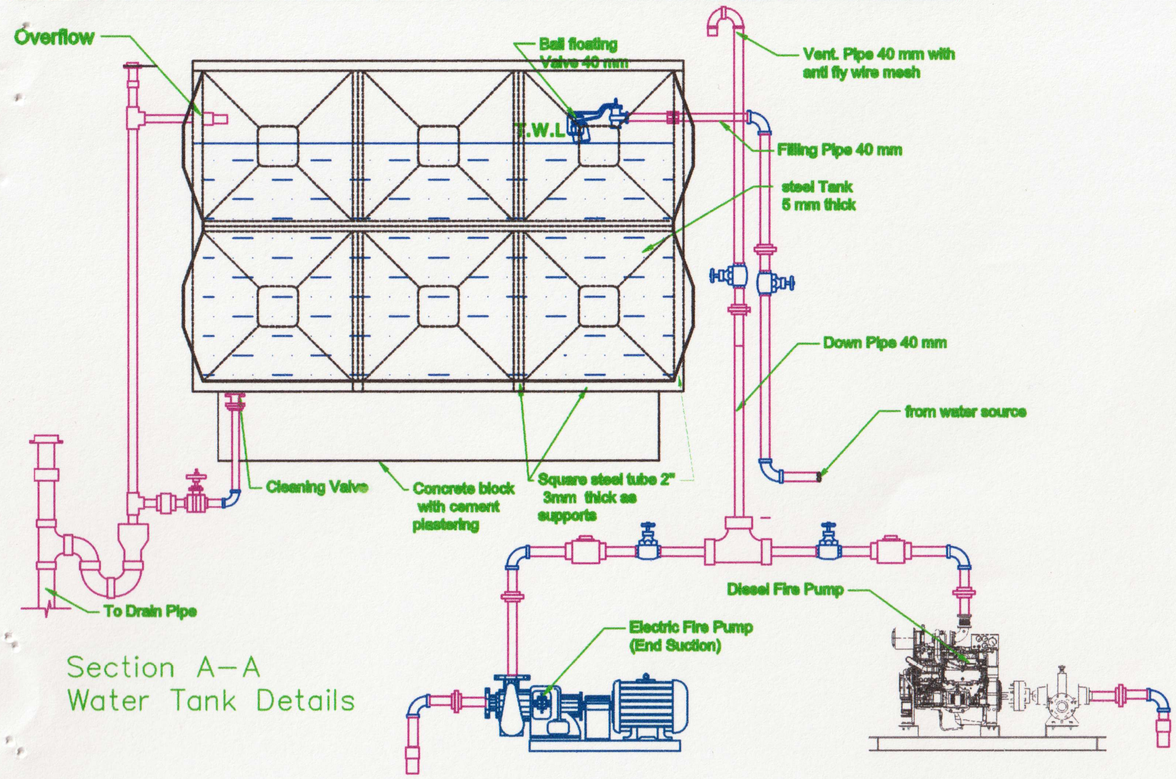

Section A–A
Water Tank Details

Equipment	Head (Bar)	Power (KW)	Capacity (L/Min)
Diesel Fire Pump	5.5 Bar		378.6 L/Min
Electric Fire Pump (end suction)	5.5 Bar	10.0 KW	378.6 L/Min
Fir Fighting Tank dimension (M)	3.95*2.35*1.55		
Fir Fighting Tank(size M³)	15		
Metal of Tank	Galvanized steel		

General Notes

german cooperation
DEUTSCHE ZUSAMMENARBEIT

Malteser International
Order of Malta Worldwide Relief

DAMA

All dimensions in(m)

THIS DRAWINGS IS THE COPYRIGHT OF DAMA,MI&BMZ/ IRAQ . IT IS NOT ALLOWED TO COPY OR REPRODUCE ITS CONTENTS IN ANY FORM WITHOUT THEIR APPROVAL

CERTAIN DRAWINGS ARE NTS (NOT TO SCALED). TECHNICAL NOTES & SPECIFICATION SHALL BE REFERENCED

مكتب باور
المهندس
زهان الدين محمد امين
BAWER OFFICE

No.	Revision/Issue	Date

Firm Name and Address

Fire Fighting Details

Project Name and Address

Physical Rehabilitation Center-Telafer Hospital

Project	Sheet
Date	SA07
Scale	

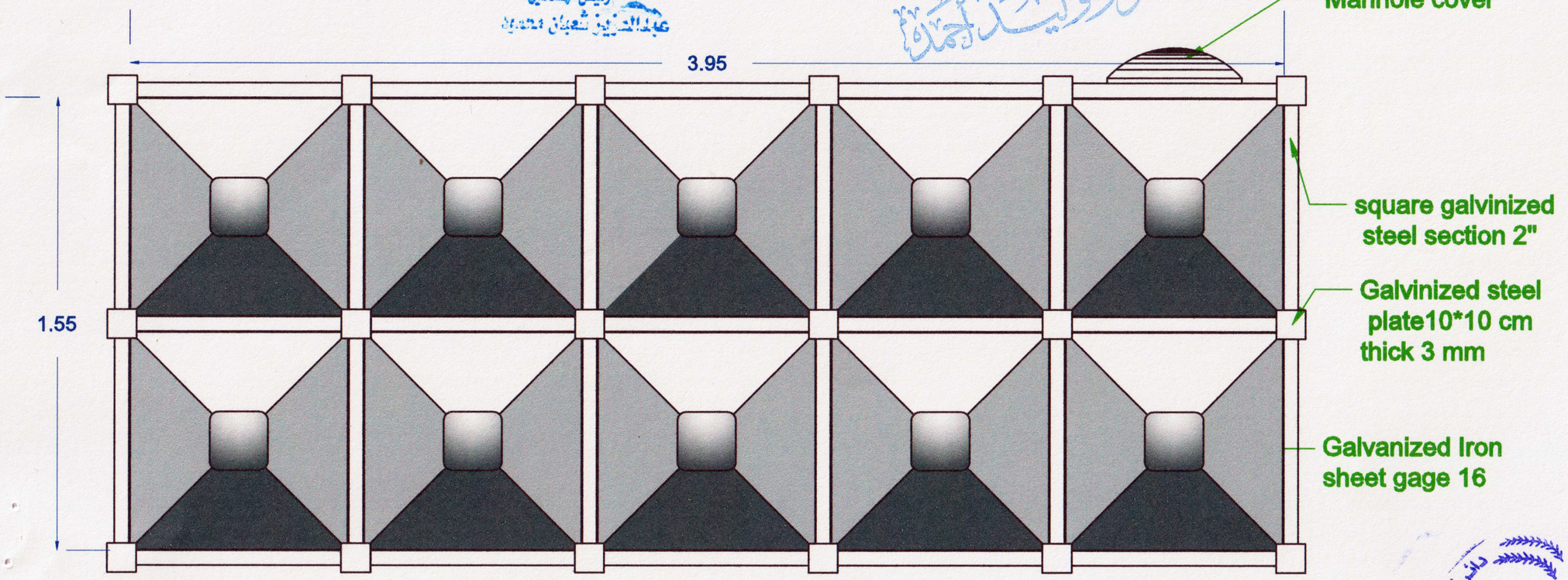

Side Elevation of water tank

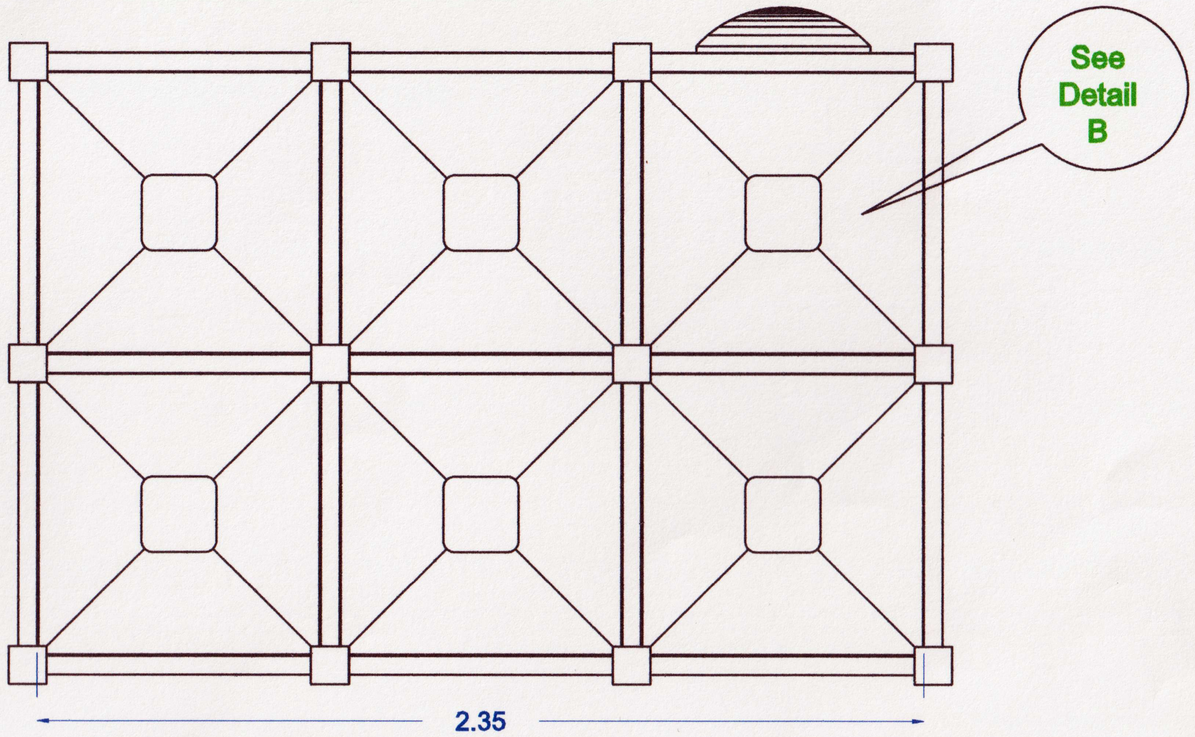

Front Elevation of water tank

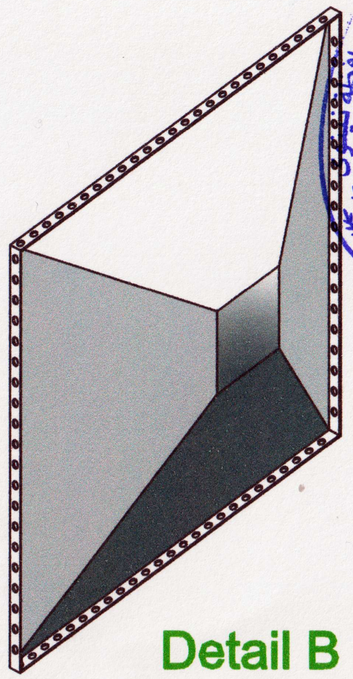

Detail B

General Notes

german cooperation
DEUTSCHE ZUSAMMENARBEIT

Malteser International
Order of Malta Worldwide Relief

DAMA

All dimensions in(m)

THIS DRAWINGS IS THE COPYRIGHT OF DAMA,MI&BMZ/ IRAQ . IT IS NOT ALLOWED TO COPY OR REPRODUCE ITS CONTENTS IN ANY FORM WITHOUT THEIR APPROVAL

CERTAIN DRAWINGS ARE NTS (NOT TO SCALED). TECHNICAL NOTES & SPECIFICATION SHALL BE REFERENCED

مكتب باور
المهندس
برهان الدين محمد امين
BAWER OFFICE

No.	Revision/Issue	Date

Firm Name and Address

Fire Fighting Tank Detail

Project Name and Address

Physical Rehabilitation Center-Telafer Hospital

Project	Sheet
Date	SA08
Scale	

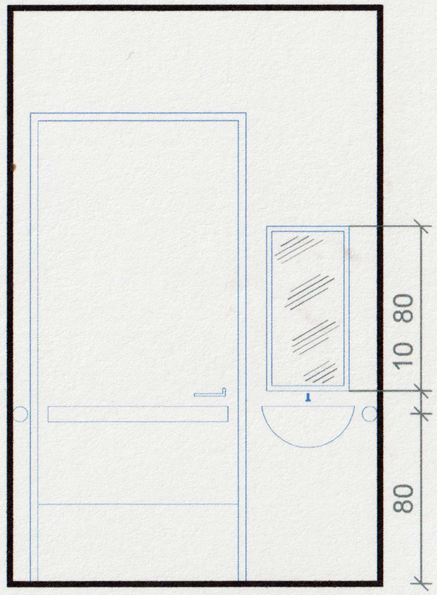

Sec. A-A

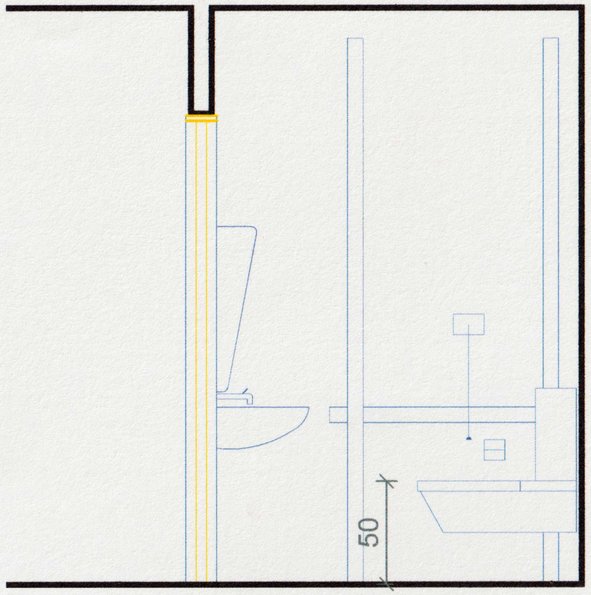

Sec. B-B

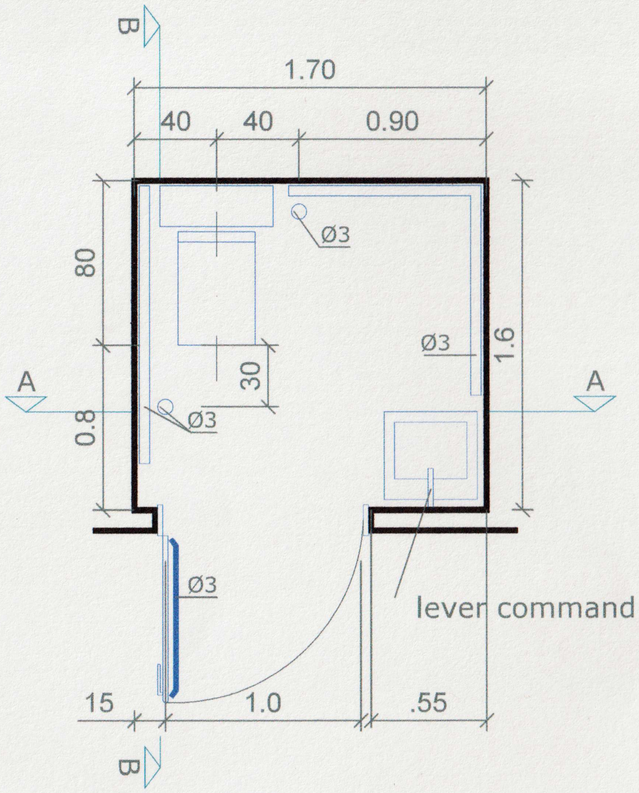

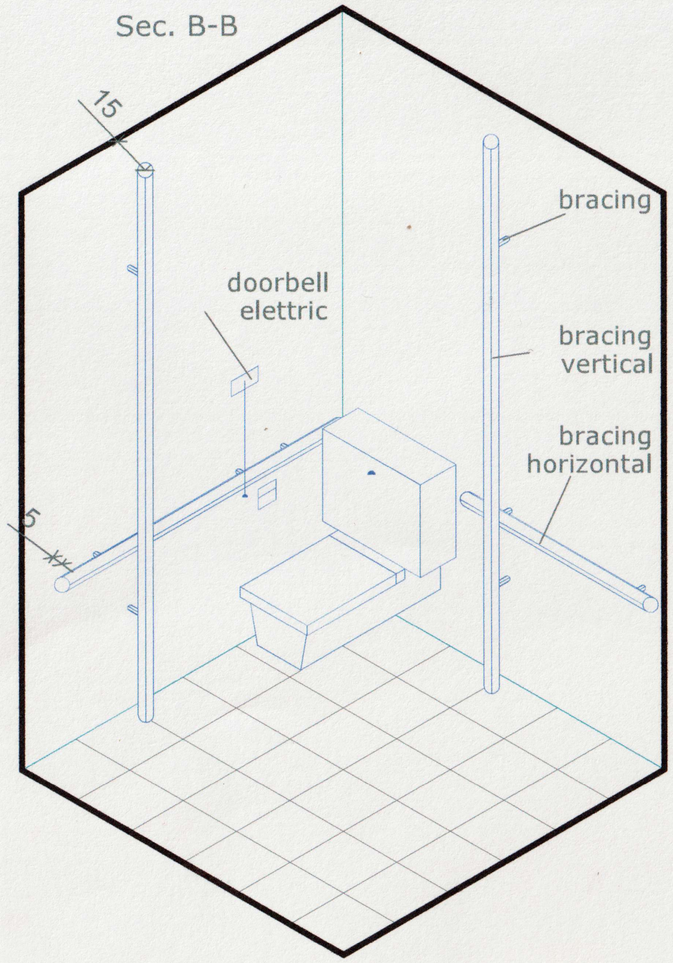

رئيس مهندسين
عبدالمنعم شعبان احمد

مهندس أقدم
فؤاد وليد أحمد

دائرة صحة محافظة نينوى
قسم المشاريع وخدمات الهندسة والصيانة

General Notes

german cooperation
DEUTSCHE ZUSAMMENARBEIT

Malteser International
Order of Malta Worldwide Relief

DAMA

All dimensions in(m)

THIS DRAWINGS IS THE COPYRIGHT OF DAMA,MI&BMZ/ IRAQ . IT IS NOT ALLOWED TO COPY OR REPRODUCE ITS CONTENTS IN ANY FORM WITHOUT THEIR APPROVAL

CERTAIN DRAWINGS ARE NTS (NOT TO SCALED). TECHNICAL NOTES & SPECIFICATION SHALL BE REFERENCED

مكتب باور
المهندس
برهان الدين محمد امين
BAWER OFFICE

No.	Revision/Issue	Date

Firm Name and Address

Disabled toilets

Project Name and Address

Physical Rehabilitation Center-Telafer Hospital

Project	Sheet
Date	SA09
Scale	

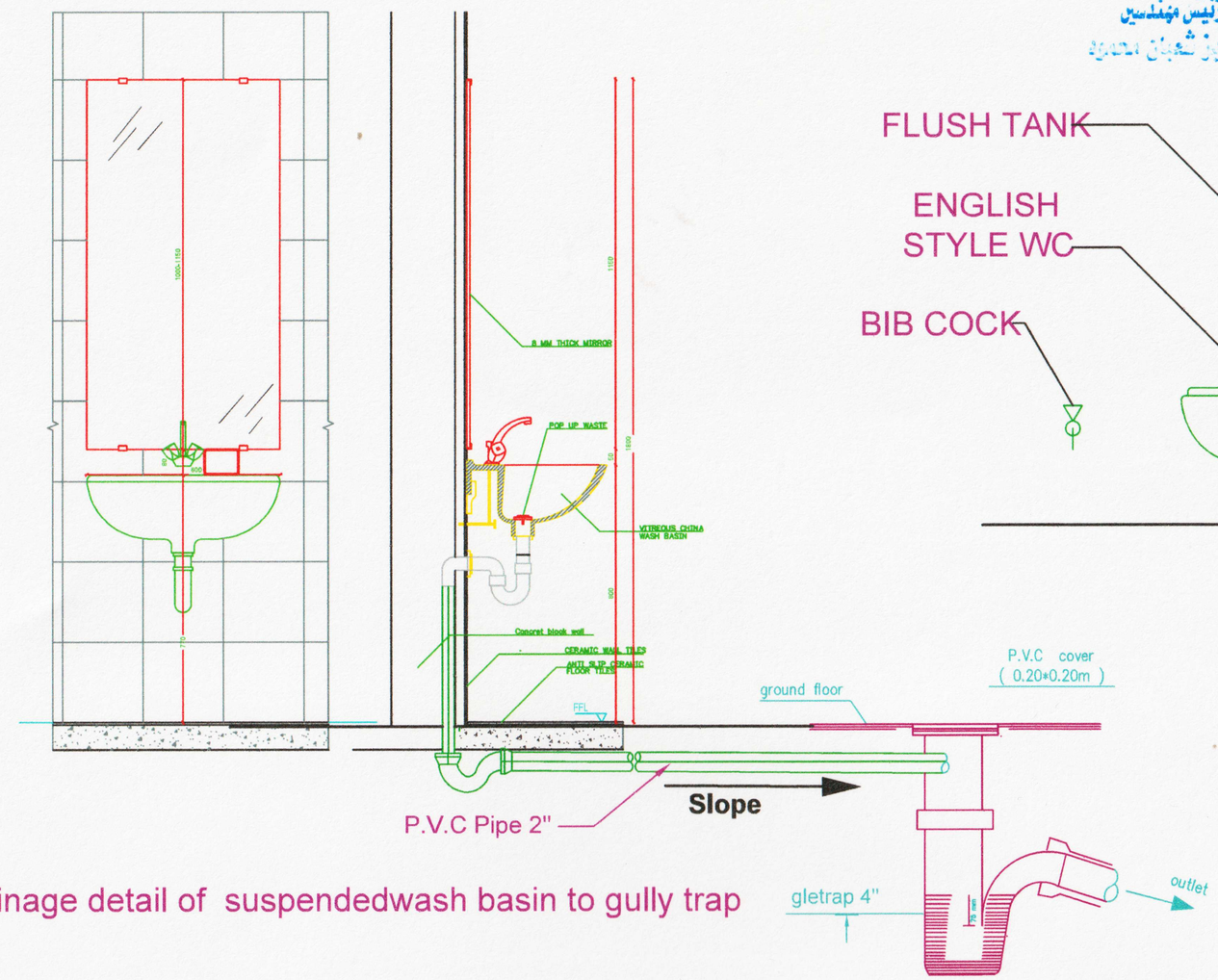

Drainage detail of suspendedwash basin to gully trap

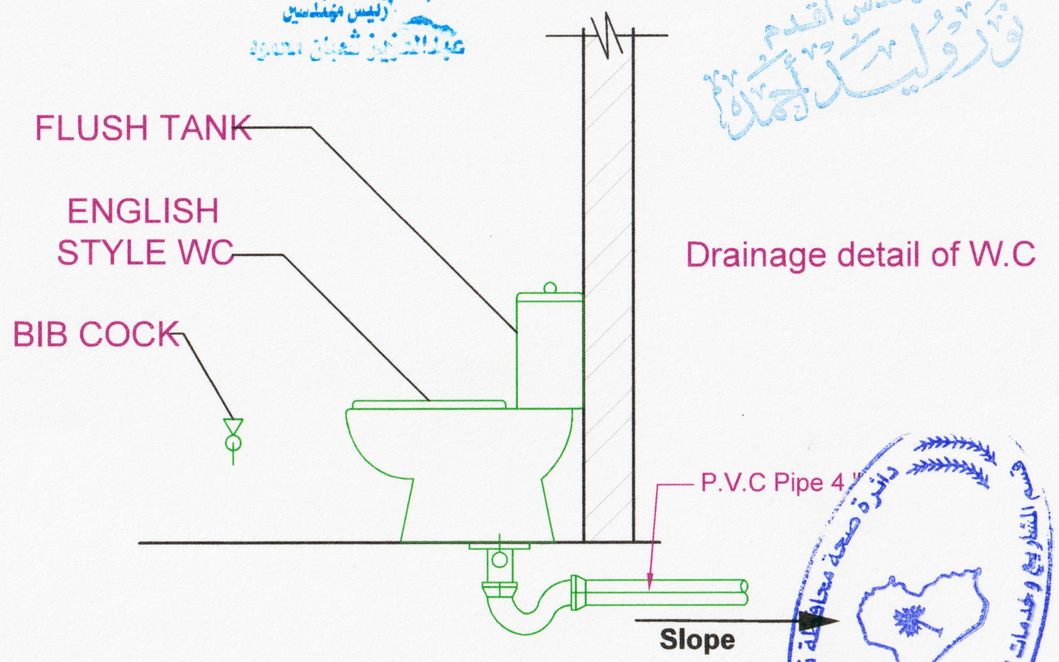

Drainage detail of W.C

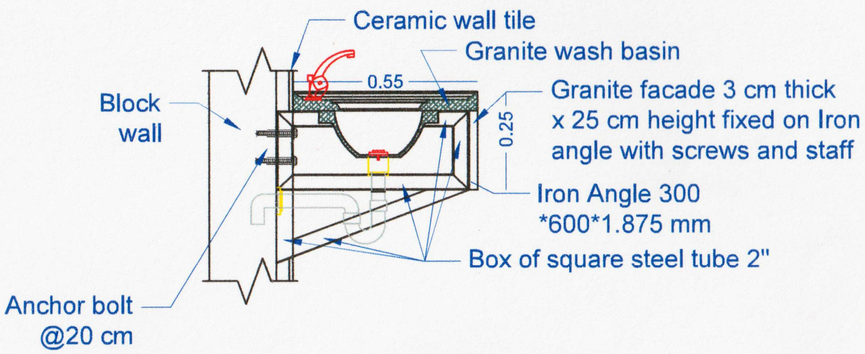

Section A-A

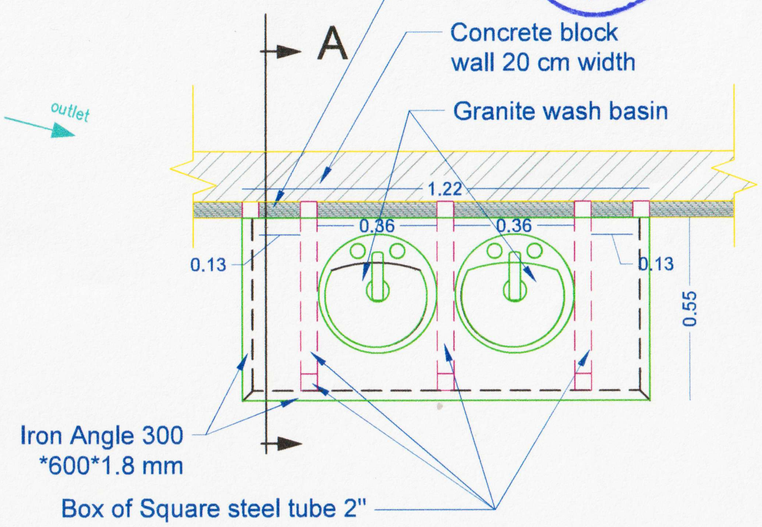

Granite wash basin plan

General Notes

german cooperation
DEUTSCHE ZUSAMMENARBEIT

Malteser International
Order of Malta Worldwide Relief

DAMA

All dimensions in(m)

THIS DRAWINGS IS THE COPYRIGHT OF DAMA,MI&BMZ/ IRAQ . IT IS NOT ALLOWED TO COPY OR REPRODUCE ITS CONTENTS IN ANY FORM WITHOUT THEIR APPROVAL

CERTAIN DRAWINGS ARE NTS (NOT TO SCALED). TECHNICAL NOTES & SPECIFICATION SHALL BE REFERENCED

No.	Revision/Issue	Date

Firm Name and Address

Sanitation details

Project Name and Address

Physical Rehabilitation Center-Telafer Hospital

Project	Sheet
Date	SA10
Scale	

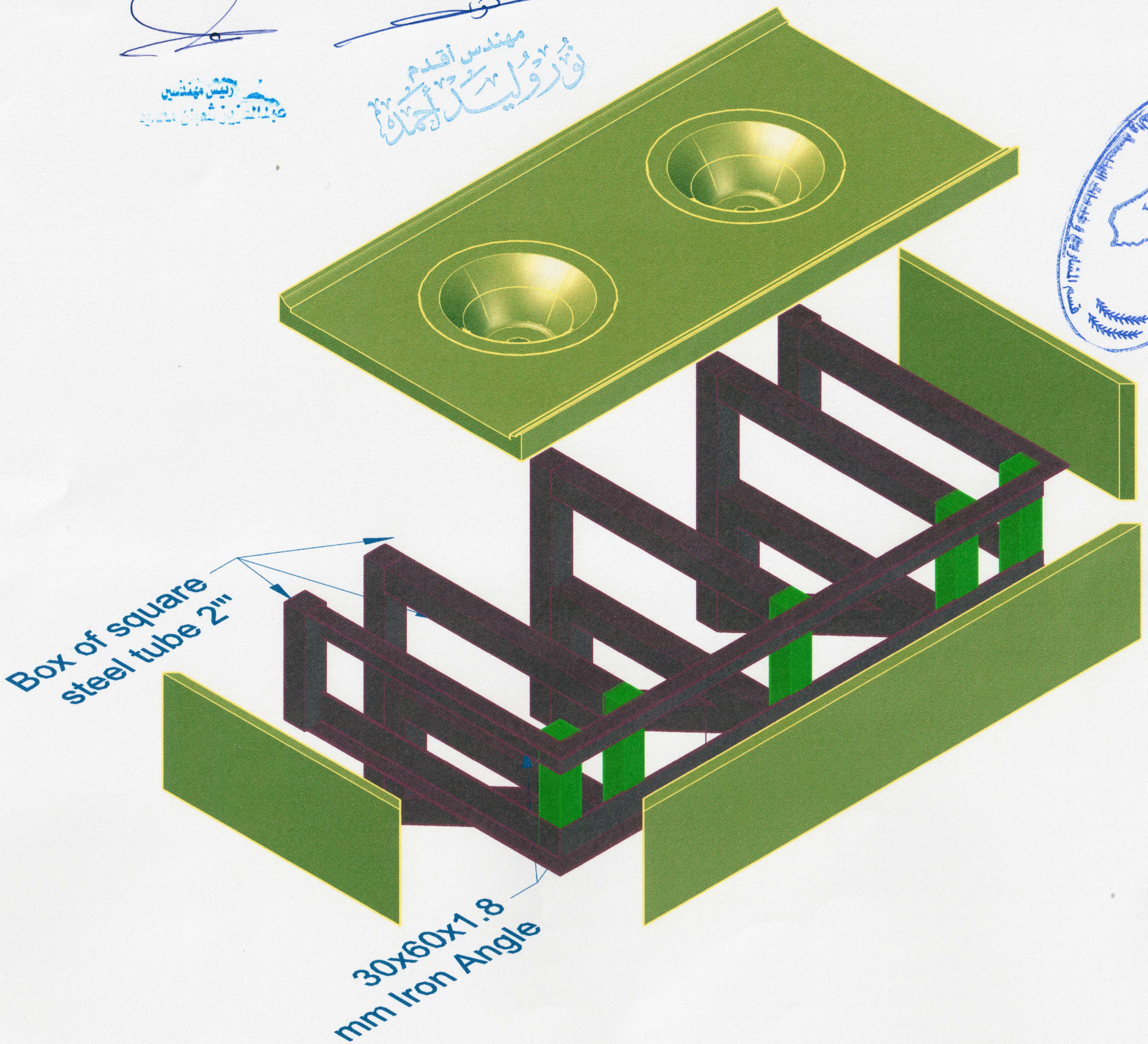

General Notes

german cooperation
DEUTSCHE ZUSAMMENARBEIT

Malteser International
Order of Malta Worldwide Relief

DAMA

All dimensions in(m)

THIS DRAWINGS IS THE COPYRIGHT OF DAMA,MI&BMZ/ IRAQ . IT IS NOT ALLOWED TO COPY OR REPRODUCE ITS CONTENTS IN ANY FORM WITHOUT THEIR APPROVAL

CERTAIN DRAWINGS ARE NTS (NOT TO SCALED). TECHNICAL NOTES & SPECIFICATION SHALL BE REFERENCED

مكتب باور
المهندس
برهان الدين محمد امين
BAWER OFFICE

No.	Revision/Issue	Date

Firm Name and Address

Wash basin counter detail

Project Name and Address

Physical Rehabilitation Center-Telafer Hospital

Project	Sheet
Date	SA11
Scale	

General Notes

german cooperation
DEUTSCHE ZUSAMMENARBEIT

Malteser International

DAMA

All dimensions in(m)

THIS DRAWINGS IS THE COPYRIGHT OF DAMA,MI&BMZ/ IRAQ . IT IS NOT ALLOWED TO COPY OR REPRODUCE ITS CONTENTS IN ANY FORM WITHOUT THEIR APPROVAL

CERTAIN DRAWINGS ARE NTS (NOT TO SCALED). TECHNICAL NOTES & SPECIFICATION SHALL BE REFERENCED

مكتب باور
المهندس
برهان الدين محمد امين
BAWER OFFICE

No.	Revision/Issue	Date

Firm Name and Address

External View (Front & Right Side)

Project Name and Address

Physical Rehabilitation Center-Telafer Hospital

Project	Sheet
Date	V01
Scale	

General Notes

All dimensions in(m)

THIS DRAWINGS IS THE COPYRIGHT OF DAMA,MI&BMZ/ IRAQ . IT IS NOT ALLOWED TO COPY OR REPRODUCE ITS CONTENTS IN ANY FORM WITHOUT THEIR APPROVAL

CERTAIN DRAWINGS ARE NTS (NOT TO SCALED). TECHNICAL NOTES & SPECIFICATION SHALL BE REFERENCED

No.	Revision/Issue	Date

File Name and Address

External View (Front&Left Side

Project Name and Address

Physical Rehabilitation Center-Telafer Hospital

Project	Sheet
Date	V02
Scale	

رئيس مهندسين

مهندس أقدم
وليد أحمد

دائرة صحة محافظة نينوى
قسم المشاريع وخدمات الهندسة والصيانة

General Notes

german cooperation
DEUTSCHE ZUSAMMENARBEIT

Malteser International

DAMA

All dimensions in(m)

THIS DRAWINGS IS THE COPYRIGHT OF DAMA,MI&BMZ/ IRAQ . IT IS NOT ALLOWED TO COPY OR REPRODUCE ITS CONTENTS IN ANY FORM WITHOUT THEIR APPROVAL

CERTAIN DRAWINGS ARE NTS (NOT TO SCALED). TECHNICAL NOTES & SPECIFICATION SHALL BE REFERENCED

مكتب باور
المهندس
برهان الدين محمد امين
BAWER OFFICE

No.	Revision/Status	Date

Firm Name and Address

External View (Rear & Right Side)

Project Name and Address

Physical Rehabilitation Center-Telafer Hospital

Project	Sheet
Date	V03
Scale	

General Notes

german cooperation
DEUTSCHE ZUSAMMENARBEIT

Malteser International

DAMA

All dimensions in(m)

THIS DRAWINGS IS THE COPYRIGHT OF DAMA,MI&BMZ/ IRAQ . IT IS NOT ALLOWED TO COPY OR REPRODUCE ITS CONTENTS IN ANY FORM WITHOUT THEIR APPROVAL

CERTAIN DRAWINGS ARE NTS (NOT TO SCALED). TECHNICAL NOTES & SPECIFICATION SHALL BE REFERENCED

مكتب باور
المهندس
رهان الدين محمد امين
BAWER OFFICE

No.	Revision/Issue	Date

Firm Name and Address

External View (Rear&Left Side)

Project Name and Address

Physical Rehabilitation Center-Telafer Hospital

Project	Sheet
Date	V04
Title	

مهندس أقدم
وليد أحمد

رئيس مهندسين

دائرة صحة محافظة نينوى
قسم المشاريع وتحديات المؤسسة والصيانة

General Notes

All dimensions in(m)

THIS DRAWINGS IS THE COPYRIGHT OF DAMA,MI&BMZ/ IRAQ . IT IS NOT ALLOWED TO COPY OR REPRODUCE ITS CONTENTS IN ANY FORM WITHOUT THEIR APPROVAL

CERTAIN DRAWINGS ARE NTS (NOT TO SCALED). TECHNICAL NOTES & SPECIFICATION SHALL BE REFERENCED

No.	Revision/Issue	Date

Firm Name and Address

Internal View -Patient Toilet

Project Name and Address

Physical Rehabilitation Center-Telafer Hospital

Project	Sheet
Date	V05
Scale	

General Notes

german cooperation
DEUTSCHE ZUSAMMENARBEIT

Malteser International

DAMA

All dimensions in(m)

THIS DRAWINGS IS THE COPYRIGHT OF DAMA,MI&BMZ/ IRAQ . IT IS NOT ALLOWED TO COPY OR REPRODUCE ITS CONTENTS IN ANY FORM WITHOUT THEIR APPROVAL

CERTAIN DRAWINGS ARE NTS (NOT TO SCALED). TECHNICAL NOTES & SPECIFICATION SHALL BE REFERENCED

مكتب باور المهندس برهان الدين محمد امين
BAWER OFFICE

No.	Revision/Issue	Date

Title Name and Address

Internal View -Reception-.

Project Name and Address

Physical Rehabilitation Center-Telafer Hospital

Project	Plan
Date	V06
Scale	

دائرة صحة محافظة نينوى
قسم المشاريع وخدمات الهندسة والصيانة

General Notes

german cooperation
DEUTSCHE ZUSAMMENARBEIT

Malteser International

DAMA

All dimensions in(m)

THIS DRAWINGS IS THE COPYRIGHT OF DAMA,MI&BMZ/ IRAQ . IT IS NOT ALLOWED TO COPY OR REPRODUCE ITS CONTENTS IN ANY FORM WITHOUT THEIR APPROVAL

CERTAIN DRAWINGS ARE NTS (NOT TO SCALED). TECHNICAL NOTES & SPECIFICATION SHALL BE REFERENCED

مكتب باور
المهندس
زهان الدين محمد امين
BAWER OFFICE

No.	Revision/Issue	Date

Firm Name and Address

Internal View .Elevator

Project Name and number

Physical Rehabilitation Center-Telafer Hospital

Project	Sheet
Date	V07
Scale	

General Notes

german cooperation
DEUTSCHE ZUSAMMENARBEIT

Malteser International

DAMA

All dimensions in(m)

THIS DRAWINGS IS THE COPYRIGHT OF DAMA,MI&BMZ/ IRAQ . IT IS NOT ALLOWED TO COPY OR REPRODUCE ITS CONTENTS IN ANY FORM WITHOUT THEIR APPROVAL

CERTAIN DRAWINGS ARE NTS (NOT TO SCALED). TECHNICAL NOTES & SPECIFICATION SHALL BE REFERENCED

مكتب باور
المهندس
برهان الدين محمد امين
BAWER OFFICE

No.	Revision/Issue	Date

Firm Name and Address

Internal View .Main Corridor

Project Name and Address

Physical Rehabilitation Center-Telafer Hospital

Project	Sheet
Date	V08
Date	

General Notes

german cooperation
DEUTSCHE ZUSAMMENARBEIT

Malteser International

DAMA

All dimensions in(m)

THIS DRAWINGS IS THE COPYRIGHT OF DAMA,MI&BMZ/ IRAQ . IT IS NOT ALLOWED TO COPY OR REPRODUCE ITS CONTENTS IN ANY FORM WITHOUT THEIR APPROVAL

CERTAIN DRAWINGS ARE NTS (NOT TO SCALED). TECHNICAL NOTES & SPECIFICATION SHALL BE REFERENCED

مكتب باور
المهندس
رهان الدين محمد امين
BAWER OFFICE

No.	Revision/Issue	Date

File Name and Address

Internal View Physical .Thrapy Hall

Project Name and Address

Physical Rehabilitation Center-Telafer Hospital

Project	Client
Date	
Scale	V09

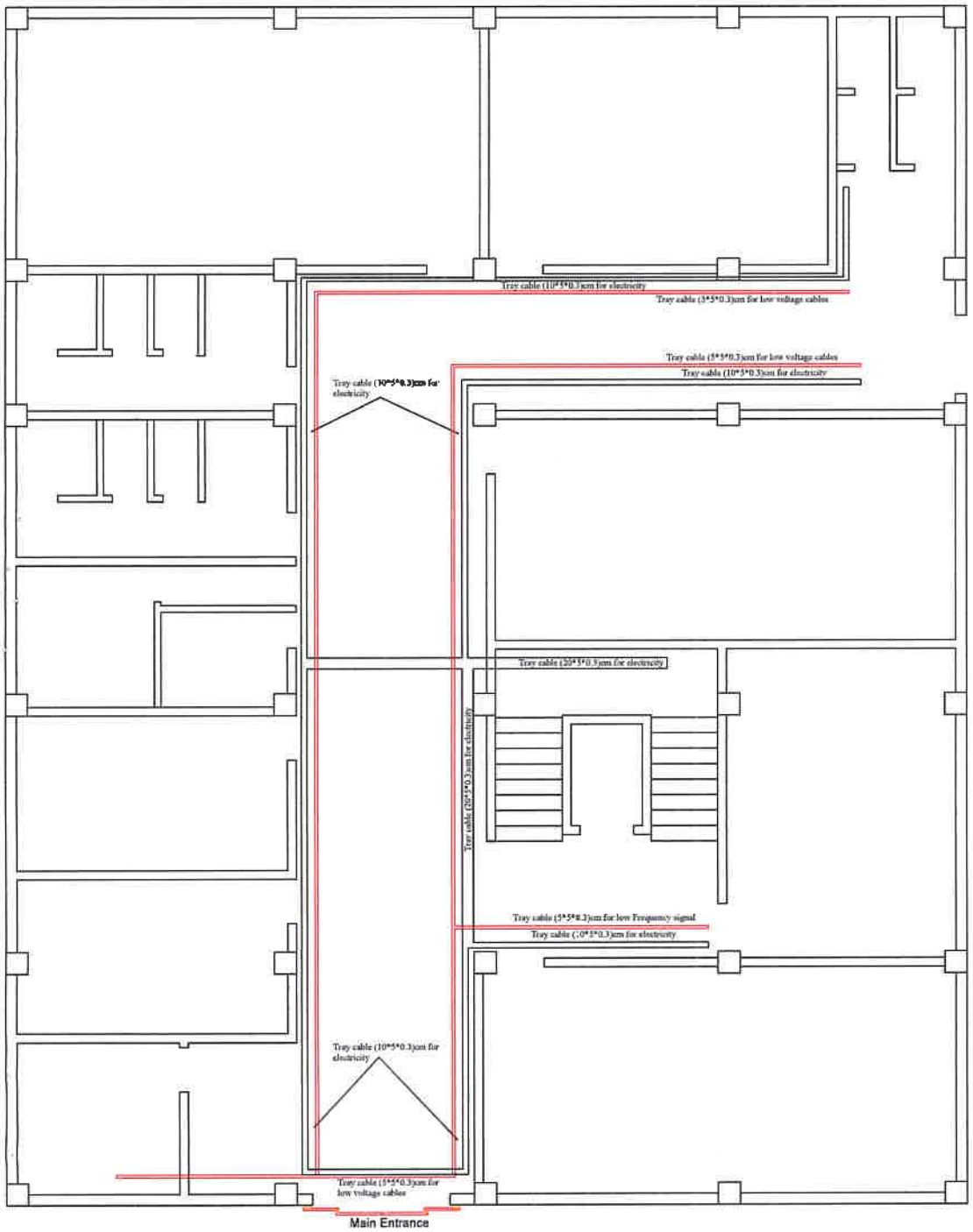

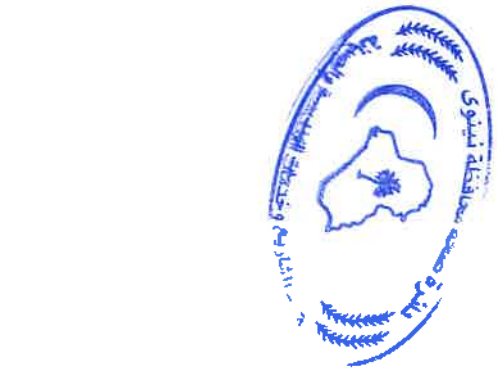

Average length of all tray cables(different sizes) =155 m

Tray cable (10*5*0.3)cm for electricity cables

Tray cable (5*5*0.3)cm for low voltage cables (internet+telephone)

Tray cable (20*5*0.3)cm for electricity

Tray cable (10*5*0.3)cm for electricity

Tray cable (5*5*0.3)cm for low voltage cables

General Notes

german cooperation
DEUTSCHE ZUSAMMENARBEIT

Malteser International

DAMA

All dimensions in(m)

THIS DRAWINGS IS THE COPYRIGHT OF DAMA,MI&BMZ/ IRAQ . IT IS NOT ALLOWED TO COPY OR REPRODUCE ITS CONTENTS IN ANY FORM WITHOUT THEIR APPROVAL

CERTAIN DRAWINGS ARE NTS (NOT TO SCALED). TECHNICAL NOTES & SPECIFICATION SHALL BE REFERENCED

مكتب باور
المهندس
زهان الدين محمد امين
BAWER OFFICE

No.	Revision/Issue	Date

Firm Name and Address

. Electric Tray Cables

Project Name and Address

Physical Rehabilitation Center-Telafer Hospital

Project

Date

Scale

Sheet

E01

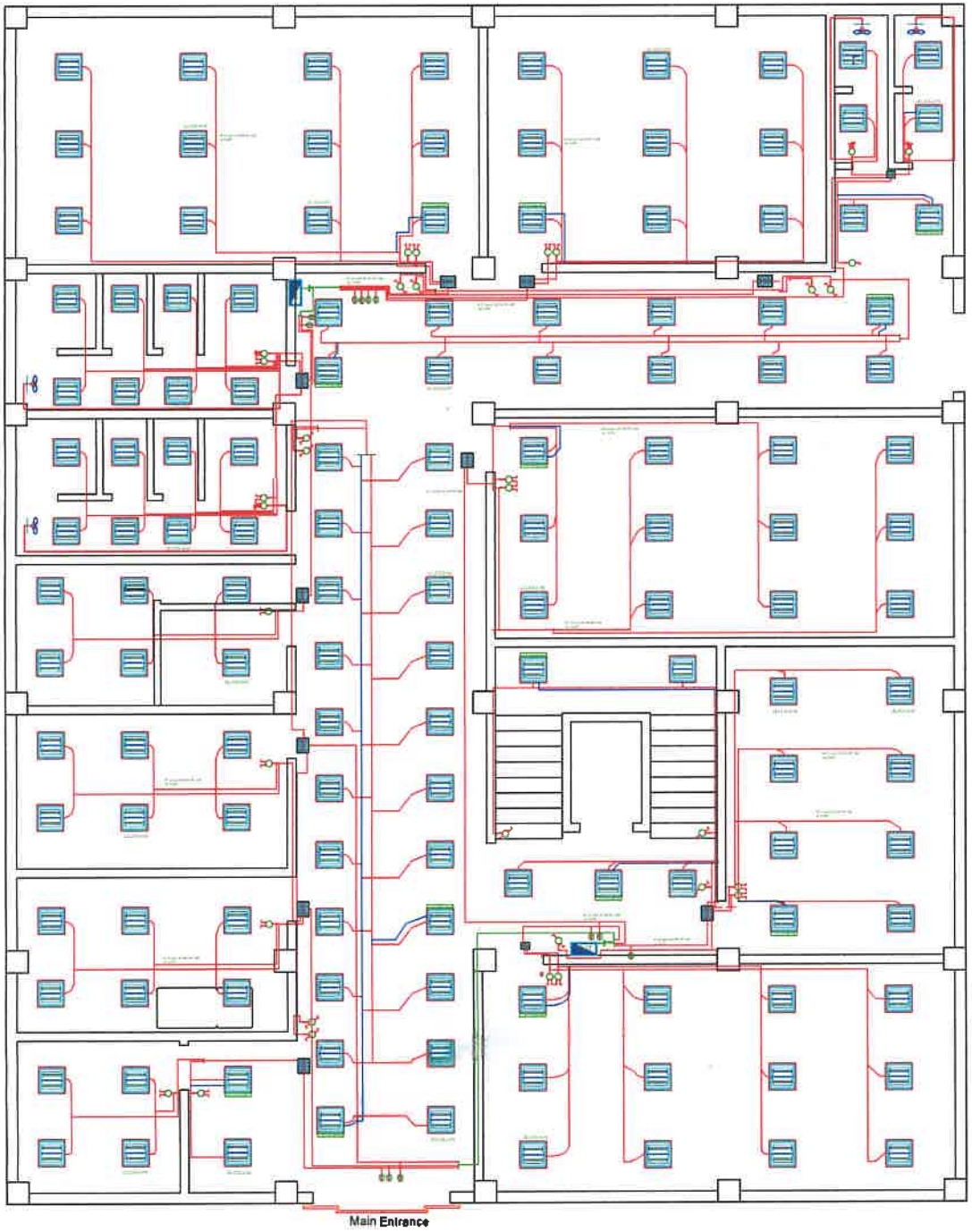

127	Lighting 60x60 cm 36 watts- false ceiling type
13	Emergency Lighting 60x60 cm 36 watts- false ceiling type
17	Lighting Switch double
1	Lighting Switch single
12	Lighting Switch two way
4	Lighting Switch four buttons

General Notes

german cooperation
DEUTSCHE ZUSAMMENARBEIT

Malteser International

DAMA

All dimensions in(m)

THIS DRAWINGS IS THE COPYRIGHT OF DAMA,MI&BMZ/ IRAQ . IT IS NOT ALLOWED TO COPY OR REPRODUCE ITS CONTENTS IN ANY FORM WITHOUT THEIR APPROVAL

CERTAIN DRAWINGS ARE NTS (NOT TO SCALED). TECHNICAL NOTES & SPECIFICATION SHALL BE REFERENCED

مكتب باور
المهندس
رهان الدين محمد امين
BAWER OFFICE

No.	Revision/Issue	Date

Firm Name and Address

Elec. Lighting

Project Name and Address

Physical Rehabilitation Center-Telafer Hospital

Project
Date
Scale
Sheet
E02

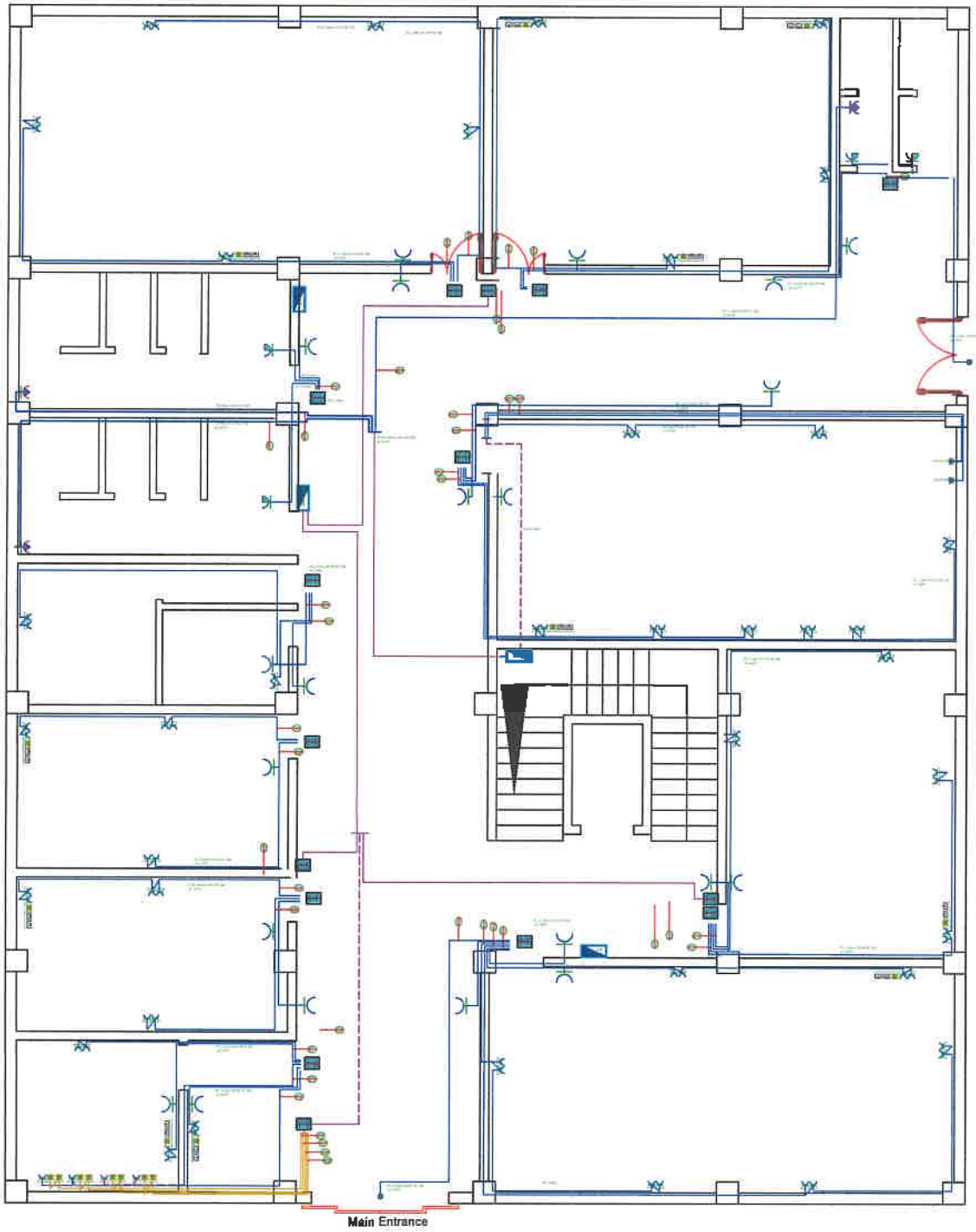

4	Switch plug 13 A with cover
101	Switch plug 13 A
18	U.P.S Switch plug
11	Internet outlet
11	Telephone outlet
3-45	Switch plug 45 A for water heaters
2-63	Switch plug 63 A for Jacuzzi

General Notes

german cooperation
DEUTSCHE ZUSAMMENARBEIT

Malteser International

DAMA

All dimensions in(m)

THIS DRAWINGS IS THE COPYRIGHT OF DAMA,MI&BMZ/ IRAQ . IT IS NOT ALLOWED TO COPY OR REPRODUCE ITS CONTENTS IN ANY FORM WITHOUT THEIR APPROVAL

CERTAIN DRAWINGS ARE NTS (NOT TO SCALED). TECHNICAL NOTES & SPECIFICATION SHALL BE REFERENCED

مكتب باور
المهندس
برهان الدين محمد امين
BAWER OFFICE

No.	Revision/Issue	Date

Elec. Power

Physical Rehabilitation Center-Telafer Hospital

E03

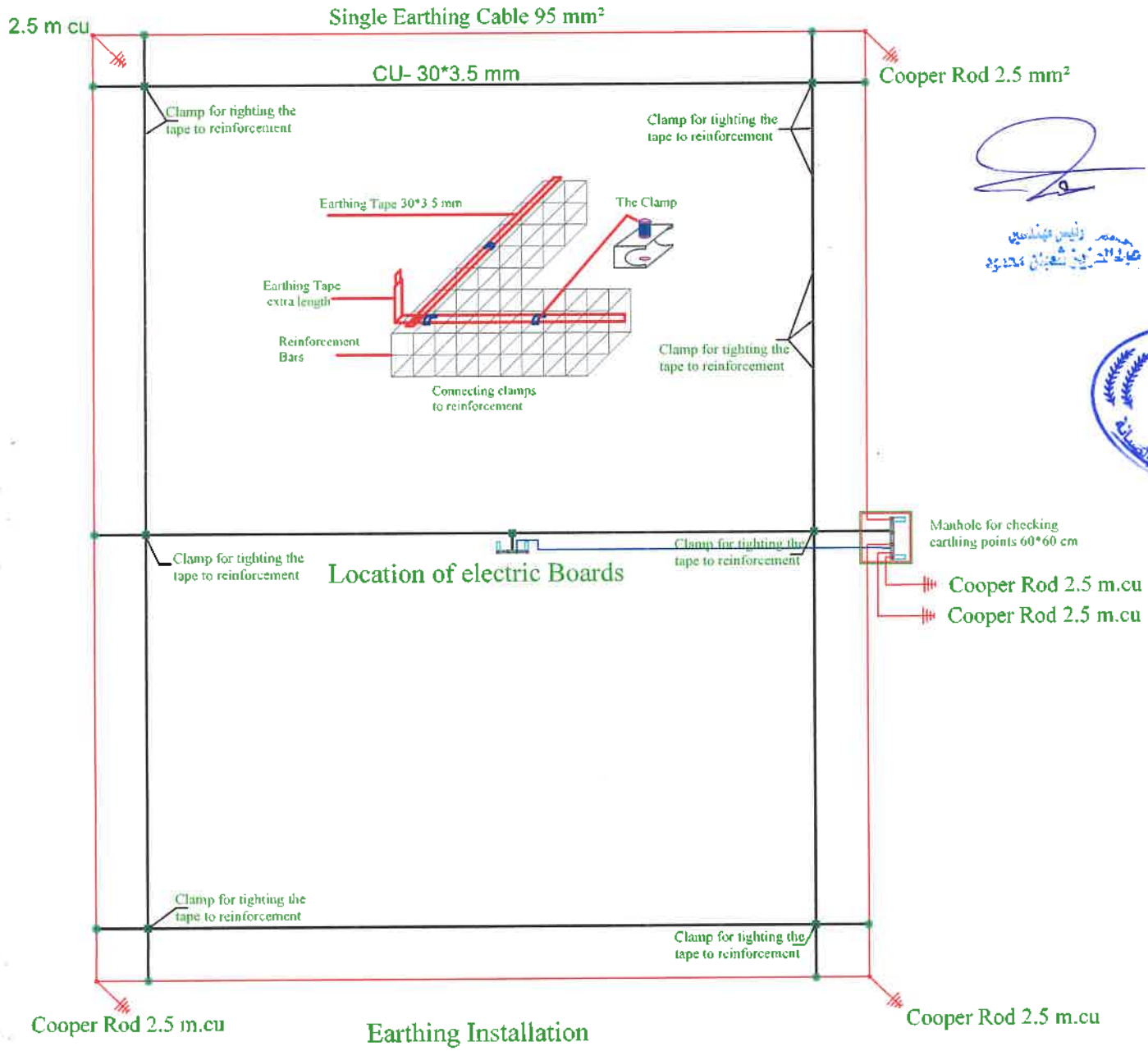

Earthing Installation

General Notes

german cooperation
DEUTSCHE ZUSAMMENARBEIT

Malteser International

DAMA

All dimensions in(m)

THIS DRAWINGS IS THE COPYRIGHT OF DAMA,MI&BMZ/ IRAQ . IT IS NOT ALLOWED TO COPY OR REPRODUCE ITS CONTENTS IN ANY FORM WITHOUT THEIR APPROVAL

CERTAIN DRAWINGS ARE NTS (NOT TO SCALED). TECHNICAL NOTES & SPECIFICATION SHALL BE REFERENCED

مكتب باور
المهندس
بهاء الدين محمد امين
BAWER OFFICE

No.	Revision/Issue	Date

. Electric Earth System

Physical Rehabilitation Center-Telafer Hospital

E04

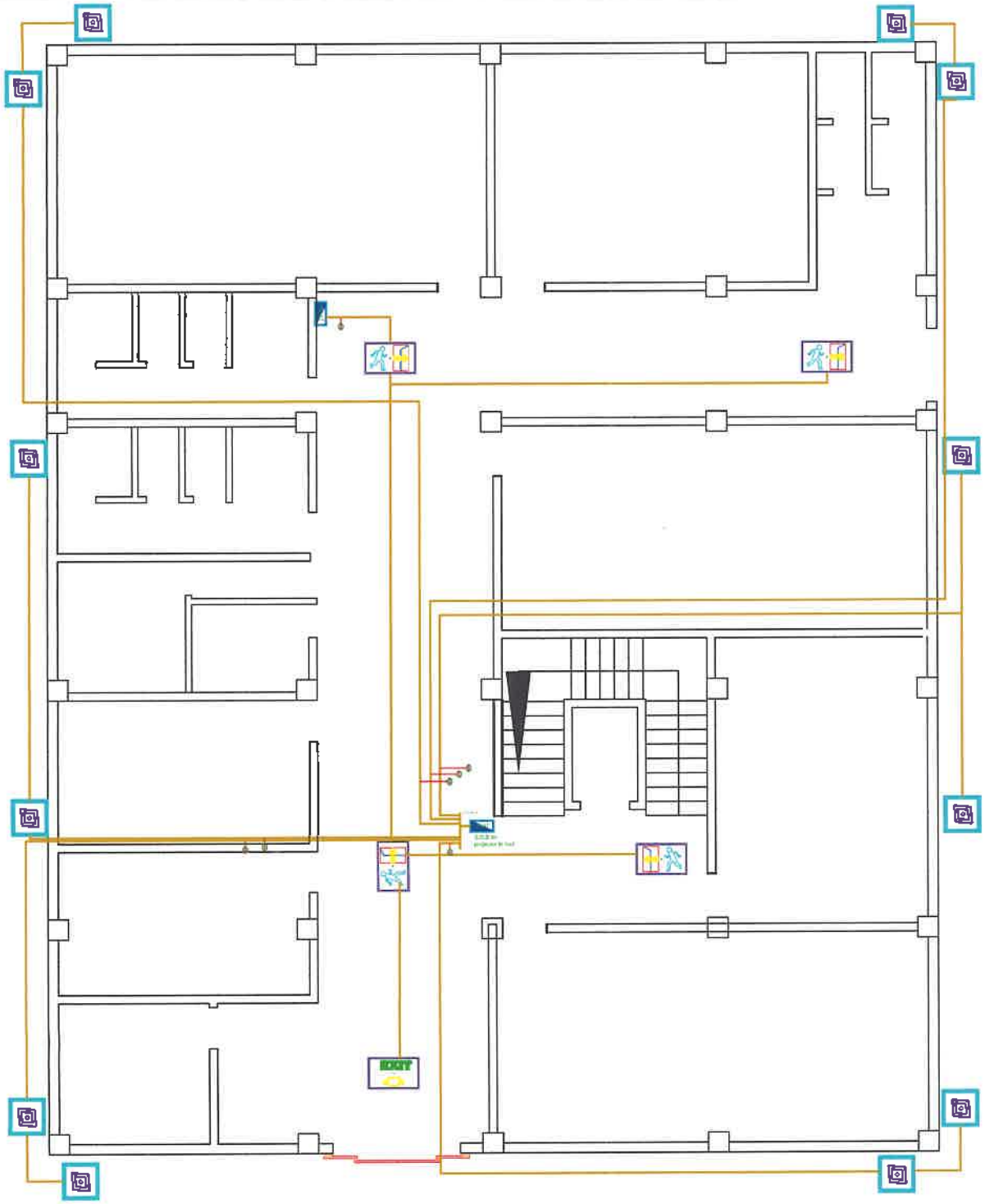

Lighting Projector IP 65 -200watts

Guiding signal for Exit

General Notes

german cooperation
DEUTSCHE ZUSAMMENARBEIT

Malteser International

DAMA

All dimensions in(m)

THIS DRAWINGS IS THE COPYRIGHT OF DAMA,MI&BMZ/ IRAQ . IT IS NOT ALLOWED TO COPY OR REPRODUCE ITS CONTENTS IN ANY FORM WITHOUT THEIR APPROVAL

CERTAIN DRAWINGS ARE NTS (NOT TO SCALED). TECHNICAL NOTES & SPECIFICATION SHALL BE REFERENCED

مكتب باور
المهندس
رهان الدين محمد امين
BAWER OFFICE

No.	Revision/Issue	Date

Elec. Projectors &Exits

Physical Rehabilitation Center-Telafer Hospital

E05

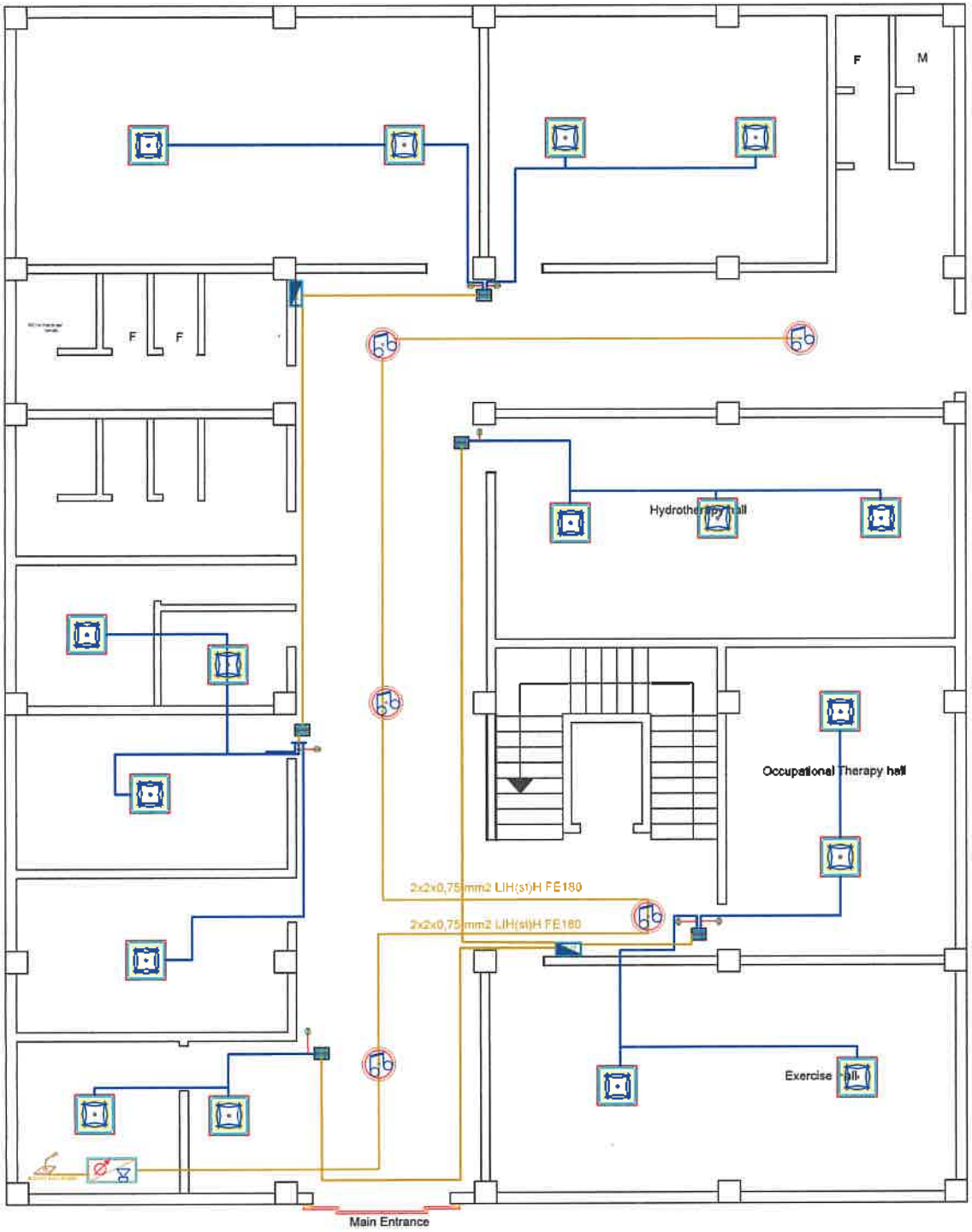

Ceiling Fan 60x60 cm -False ceiling type

False ceiling speaker

Call station microphone

Amplifier

General Notes

german cooperation
DEUTSCHE ZUSAMMENARBEIT

Malteser International

DAMA

All dimensions in(m)

THIS DRAWINGS IS THE COPYRIGHT OF DAMA,MI&BMZ/ IRAQ . IT IS NOT ALLOWED TO COPY OR REPRODUCE ITS CONTENTS IN ANY FORM WITHOUT THEIR APPROVAL

CERTAIN DRAWINGS ARE NTS (NOT TO SCALED). TECHNICAL NOTES & SPECIFICATION SHALL BE REFERENCED

مكتب باور
المهندس
رهان الدين محمد امين
BAWER OFFICE

No.	Revision/Issue	Date

Firm Name and Address

Electric
C.Fans& .
P.Adress

Project Name and Address

Physical Rehabilitation Center-Telafer Hospital

Project

Sheet

E06

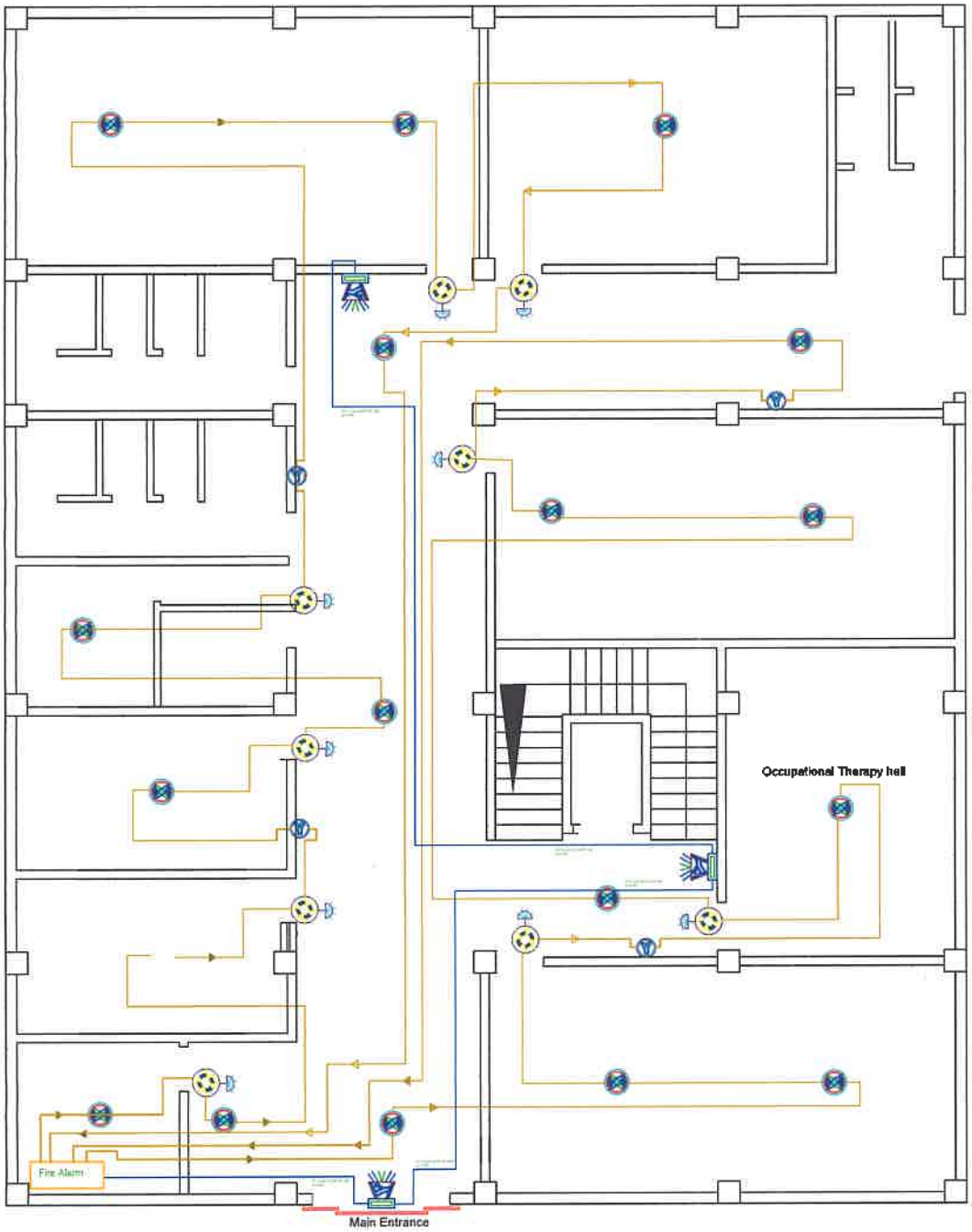

Smoke Detector

Bell

Light Signal

Push button

General Notes

german cooperation
DEUTSCHE ZUSAMMENARBEIT

Malteser International

DAMA

All dimensions in(m)

THIS DRAWINGS IS THE COPYRIGHT OF DAMA,MI&BMZ/ IRAQ . IT IS NOT ALLOWED TO COPY OR REPRODUCE ITS CONTENTS IN ANY FORM WITHOUT THEIR APPROVAL

CERTAIN DRAWINGS ARE NTS (NOT TO SCALED). TECHNICAL NOTES & SPECIFICATION SHALL BE REFERENCED

مكتب باور
المهندس
زهان الدين محمد امين
BAWER OFFICE

No.	Revision/Issue	Date

Fire Name and Address

Elec. Fire Alarm

Project Name and Address

Physical Rehabilitation Center-Telafer Hospital

Project

Date

Scale

Sheet

E07

دائرة صحة محافظة نينوى
قسم المشاريع وخدمات الهندسة والصيانة

رئيس مهندسين

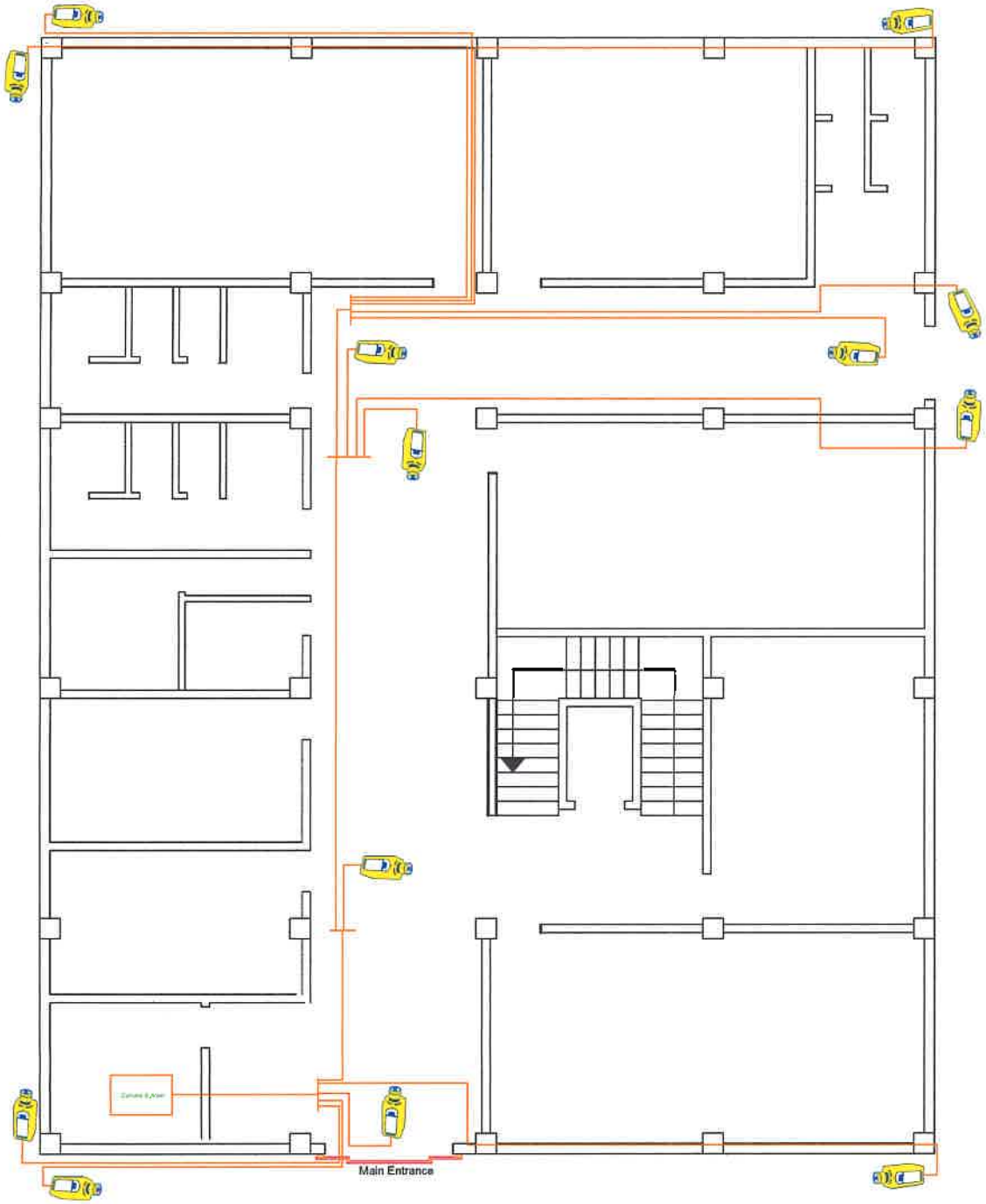

General Notes

german cooperation
DEUTSCHE ZUSAMMENARBEIT

Malteser International

DAMA

All dimensions in(m)

THIS DRAWINGS IS THE COPYRIGHT OF DAMA,MI&BMZ/ IRAQ . IT IS NOT ALLOWED TO COPY OR REPRODUCE ITS CONTENTS IN ANY FORM WITHOUT THEIR APPROVAL

CERTAIN DRAWINGS ARE NTS (NOT TO SCALED). TECHNICAL NOTES & SPECIFICATION SHALL BE REFERENCED

مكتب باور
المهندس
زهان الدين محمد امين
BAWER OFFICE

No.	Revision/Issue	Date

Firm Name and Address

Electric. Cameras

Project Name and Address

Physical Rehabilitation Center-Telafer Hospital

Project	Sheet
Date	E08
Scale	

مهندس أقدم

دائرة صحة محافظة نينوى
قسم المشاريع وخدمات الهندسة والصيانة

رئيس مهندسين

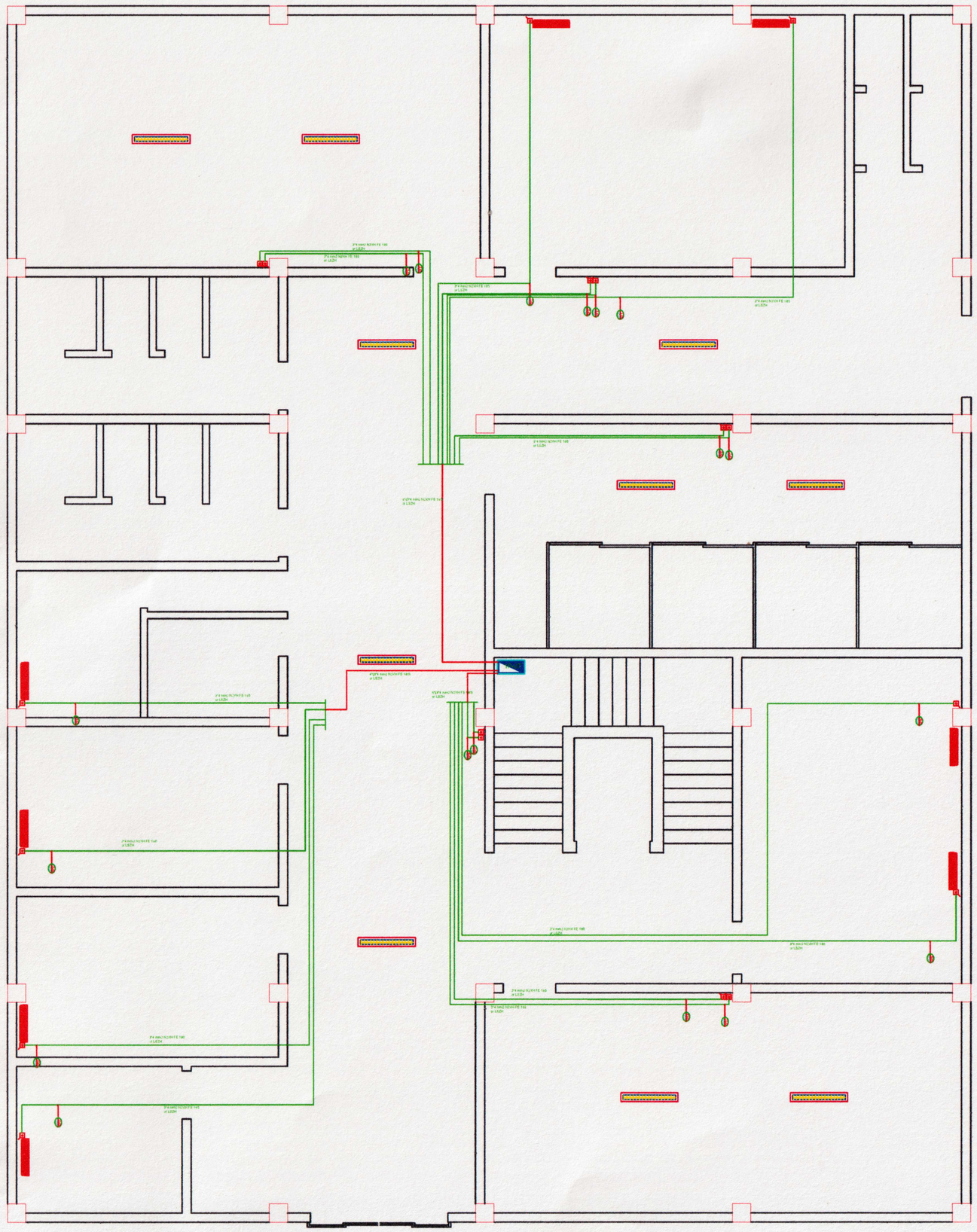

Split-Air-condition unit wall mounted -2 ton

Split-Air-condition unit Cassette type 3Ton

45 A Outlet

مهندس أقدم
وليد أحمد

دائرة صحة محافظة نينوى
قسم المشاريع وخدمات الهندسة والصيانة

رئيس مهندسين

General Notes

german cooperation
DEUTSCHE ZUSAMMENARBEIT

Malteser International
Order of Malta Worldwide Relief

DAMA

All dimensions in(m)

THIS DRAWINGS IS THE COPYRIGHT OF DAMA,MI&BMZ/ IRAQ . IT IS NOT ALLOWED TO COPY OR REPRODUCE ITS CONTENTS IN ANY FORM WITHOUT THEIR APPROVAL

CERTAIN DRAWINGS ARE NTS (NOT TO SCALED). TECHNICAL NOTES & SPECIFICATION SHALL BE REFERENCED

مكتب باور
المهندس
برهان الدين محمد امين
BAWER OFFICE

No.	Revision/Issue	Date

Firm Name and Address

Elec. Air-Conditioning

Project Name and Address

Physical Rehabilitation Center-Telafer Hospital

Project

Date

Scale

Sheet

E09

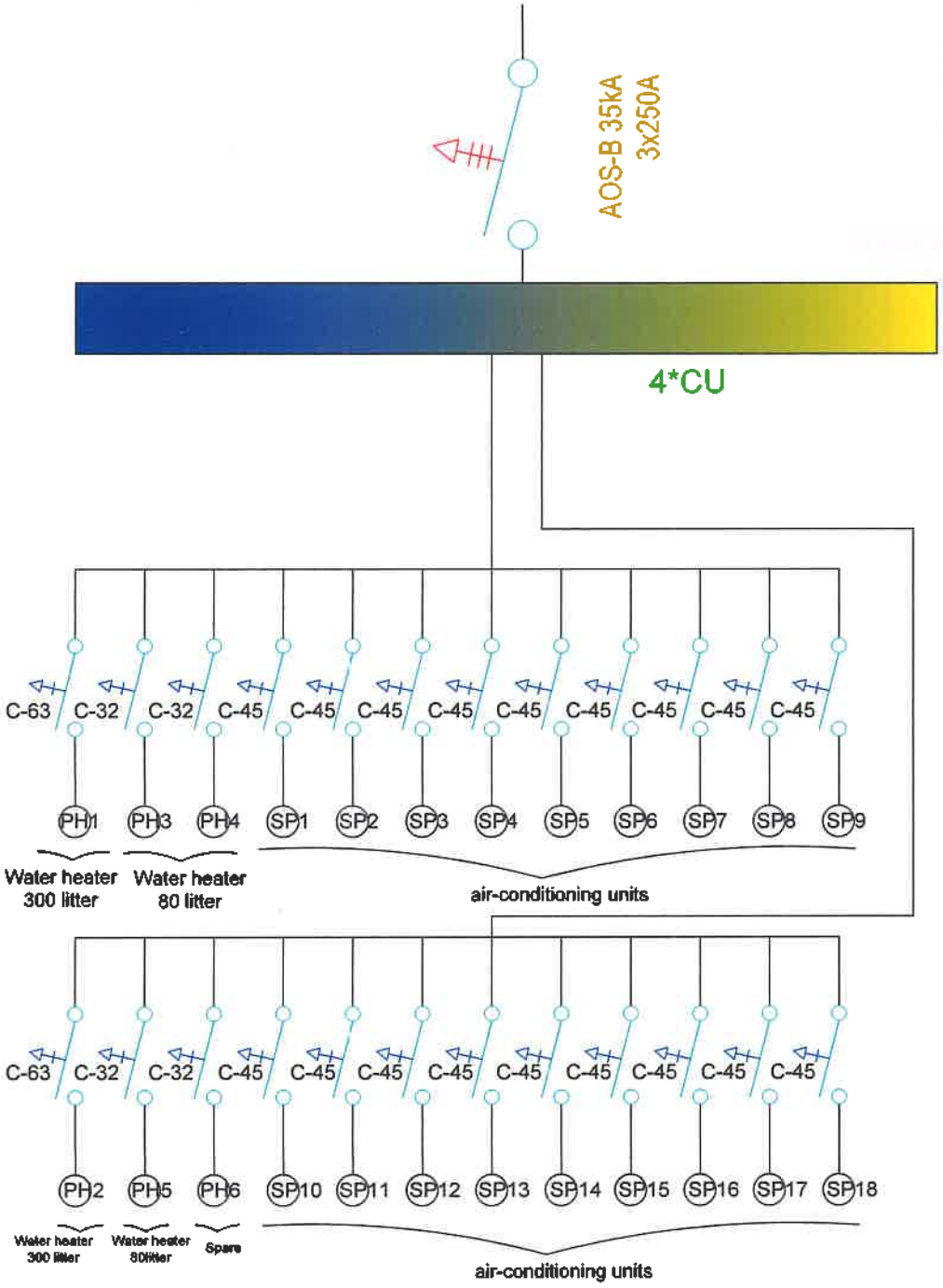

Air Conditioning& Water heaters Board

General Notes

german cooperation
DEUTSCHE ZUSAMMENARBEIT

Maltaser International

DAMA

All dimensions in(m)

THIS DRAWINGS IS THE COPYRIGHT OF DAMA,MI&BMZ/ IRAQ . IT IS NOT ALLOWED TO COPY OR REPRODUCE ITS CONTENTS IN ANY FORM WITHOUT THEIR APPROVAL

CERTAIN DRAWINGS ARE NTS (NOT TO SCALED). TECHNICAL NOTES & SPECIFICATION SHALL BE REFERENCED

مكتب باور
المهندس
رهان الدين محمد امين
BAWER OFFICE

No.	Revision/Issue	Date

Elec.
Board Layout 1

Physical Rehabilitation Center-Telafer Hospital

Project
Date
Scale
Sheet
E12

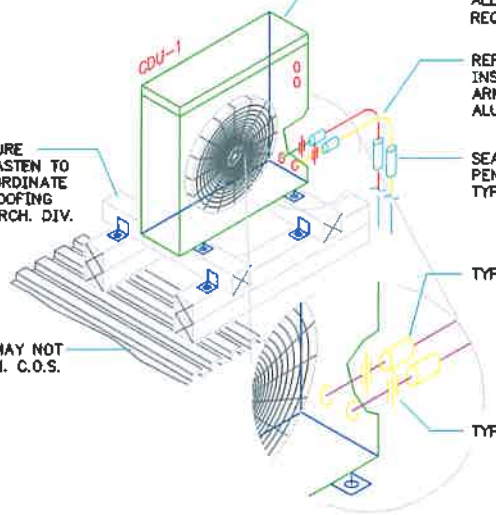

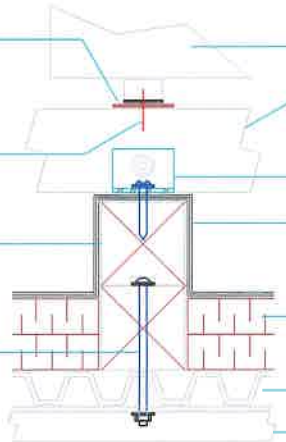

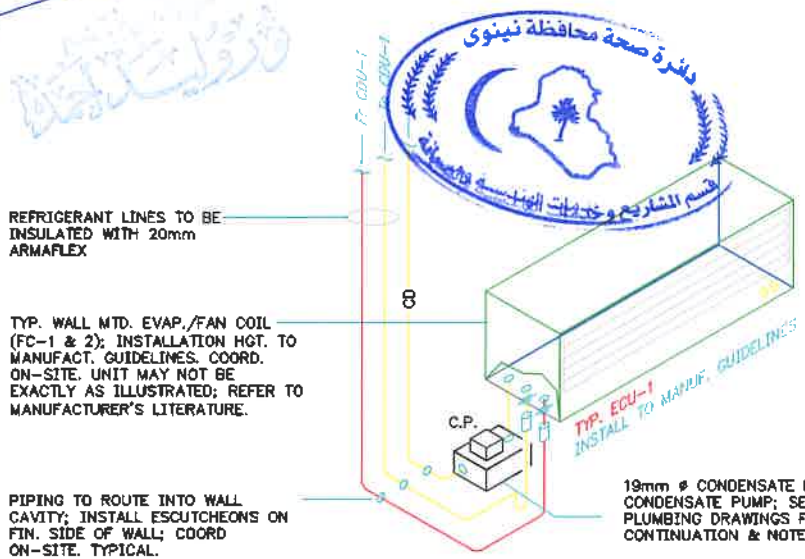

- BLOW-UP DETAIL -

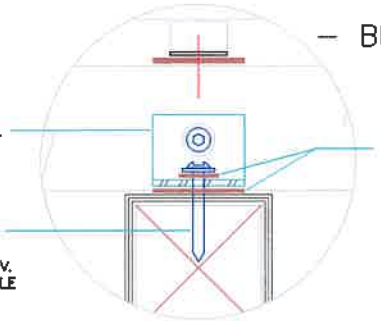

NOTES -

1.) THESE DETAILS ARE SCHEMATIC ONLY. EXACT CONFIGURATION AND ROUTING OF ALL REFRIGERANT AND CONDENSATE PIPING TO BE DETERMINED ON-SITE AND COORDINATED w WORK OF OTHER TRADES. INSTALL TO MANUFACTURER'S GUIDELINES.

2.) INSTALL ALL COMPONENTS TO MANUFACTURER'S RECOMMENDATIONS AND GUIDELINES. COORDINATE w WORK OF OTHER TRADES.

3.) INDIRECTLY CONNECT CONDENSATE DRAIN FROM CONDENSATE PUMP TO NEW FUNNEL TRAP ABOVE FIN. CEILING; REFER TO PLAN LAYOUT FOR ADDITIONAL INFORMATION. COORD. ON-SITE. CONDENSATE PUMP TO BE ENCLOSED WITHIN WALL CAVITY OR IN DEDICATED WALL MTD. ENCLOSURE AS REQ'D. TO BE c/w ACCESS DOOR. COORD. w ARCH. DIVISION. WIRE CONDENSATE PUMP TO EVAPORATOR COIL UNIT PER MANUF. INSTRUCTIONS.

4.) CAREFULLY COORDINATE THE INSTALLATION OF CONDENSER UNIT ON ROOF WITH ARCHITECTURAL AND STRUCTURAL DIVISIONS. INTEGRITY OF ROOFING MEMBRANE TO BE MAINTAINED WATERTIGHT.

General Notes

german cooperation
DEUTSCHE ZUSAMMENARBEIT

Malteser International

DAMA

All dimensions in(m)

THIS DRAWINGS IS THE COPYRIGHT OF DAMA,MI&BMZ/ IRAQ . IT IS NOT ALLOWED TO COPY OR REPRODUCE ITS CONTENTS IN ANY FORM WITHOUT THEIR APPROVAL

CERTAIN DRAWINGS ARE NTS (NOT TO SCALED). TECHNICAL NOTES & SPECIFICATION SHALL BE REFERENCED

No.	Revision/Issue	Date

Firm Name and Address

Split mounting in Roof

Project, Name and Address

Physical Rehabilitation Center-Telafer Hospital

Project
Date
Scale
Sheet
E13

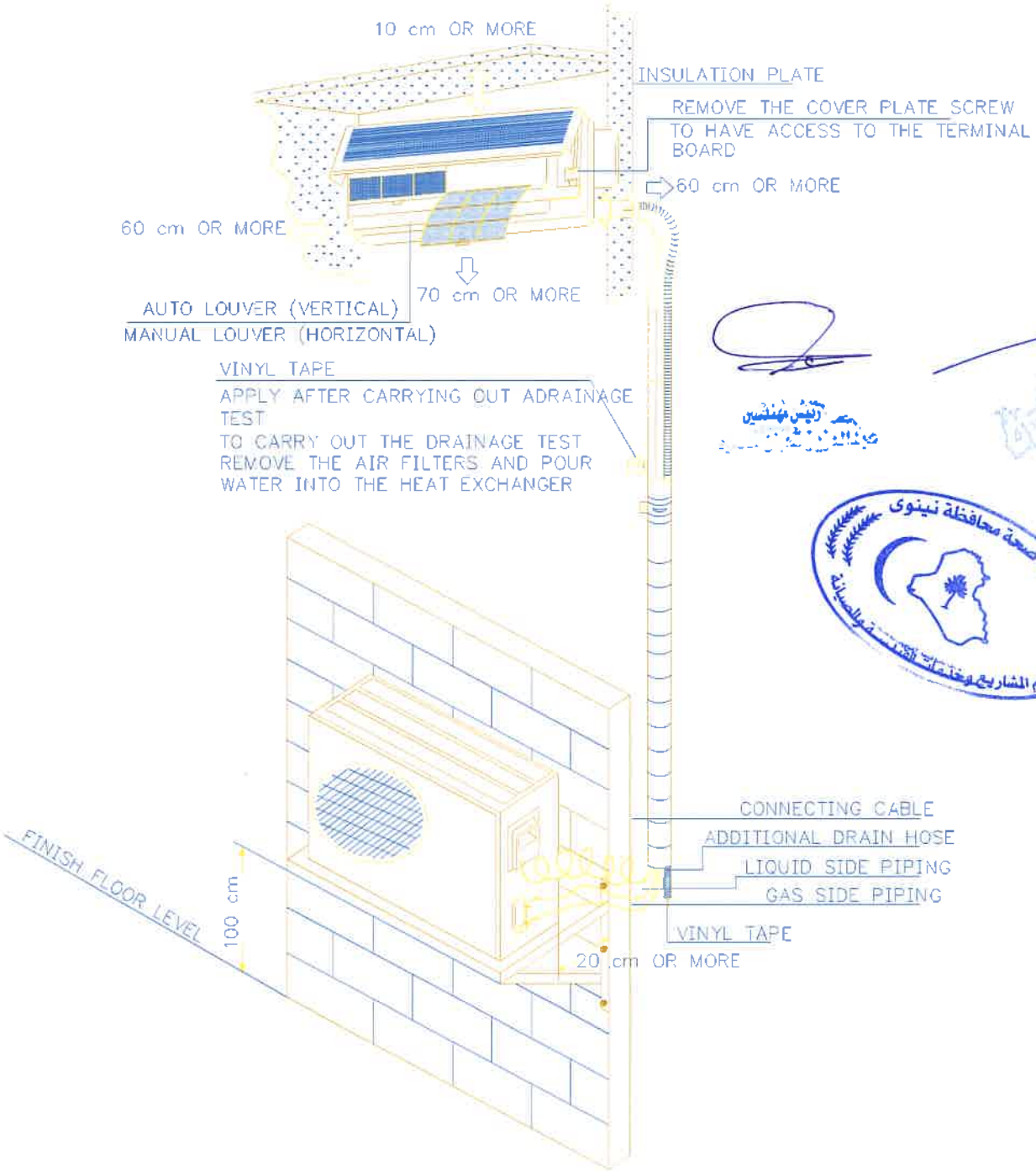

General Notes

german cooperation
DEUTSCHE ZUSAMMENARBEIT

Malteser International

DAMA

All dimensions in(m)

THIS DRAWINGS IS THE COPYRIGHT OF DAMA,MI&BMZ/ IRAQ . IT IS NOT ALLOWED TO COPY OR REPRODUCE ITS CONTENTS IN ANY FORM WITHOUT THEIR APPROVAL

CERTAIN DRAWINGS ARE NTS (NOT TO SCALED). TECHNICAL NOTES & SPECIFICATION SHALL BE REFERENCED

مكتب باور
المهندس
زهان الدين محمد امين
BAWER OFFICE

No.	Revision/Issue	Date

Title Name and Approve

Split mounting on External wall

Project Name and Address

Physical Rehabilitation Center-Telafer Hospital

Project	Sheet
Date	E14
Scale	